# SPECIFICATIONS – MON013

## Montpellier Shower Column - Chrome

## Features

- WELS 3 Star, 9L/min
- Registration number S16689
- Made from solid brass
- Durable Electroplated finish
- 1yr parts and labour warranty
- 15 years replacement warranty including finish

## Cleaning & Care

- Regularly clean with mild soapy water
- Do not use harsh detergents, bleach or abrasive cleaners
- The use of any unsuitable cleaning products may damage the surface
- Refer to installation guide for correct installation
- Check for any product defects prior to installation

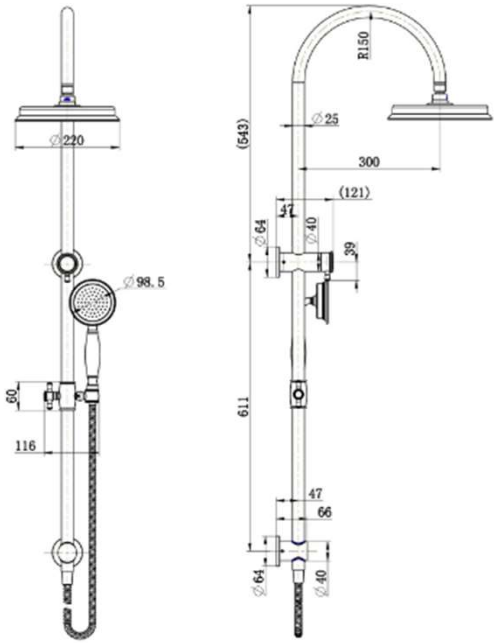


## Available in

Chrome | Matt Black | Brushed Nickel | Brushed Bronze