Encanto 470

WALL-HUNG SOLID SURFACE BASIN

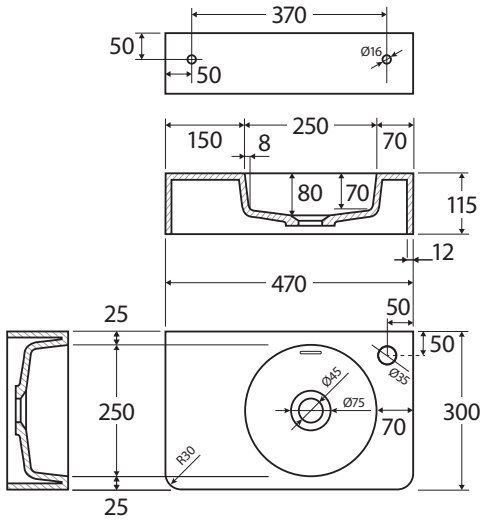

Features

- Cast stone solid surface matte white finish
- Available with or without overflow depending on model
- Requires 32mm waste
  (with or without overflow depending on model chosen; not included)
- Requires bottle trap (not included)
- Wall mounting bolts included

Available in

1 Tap Hole
With Overflow
CSB11-47

No Tap Hole
With Overflow
CSB11-47-0

1 Tap Hole
Without Overflow
CSB11-47NO

No Tap Hole
Without Overflow
CSB11-47NO-0

Cleaning & Care

- Wipe with a clean, soft cloth and mild soapy water or non-abrasive bathroom cleaner. Test in an inconspicuous area before cleaning the whole basin.
- Avoid placing hot objects, such as hair straighteners, on any surface as these will cause discolouration and marking.
- Spills of hair dye, after-shave lotion, nail polish and remover, aerosol spray and other harsh chemicals should be removed immediately to prevent damage and discolouration. Clean immediately with mild soapy water using a clean, soft cloth.
- Please find more information in the Care Guide for this product online at **fienza.com.au**

While we aim to ensure specifications are correct at the time of publication, Fienza reserves the right to make modifications without prior notice. Physical colour may vary from image shown. All measurements are shown in millimetres.
For ceramic products, please allow +/- 10 mm tolerance for manufacturing variance. Always use physical product measurements for mark-ups and roughing-in as the technical drawing may differ from actual product received.