MB02
BASIN MIXER

meir®

HANDLE VARIANTS

Paddle: MB02PD

Pinless: MB02PN

FEATURES

- Refer to the Meir website for warranty terms & conditions.
- Flow rate 5L p/m
- European ceramic cartridge
- Solid brass construction
- Box Weight 1.5 kg

CARE

- Do not install tapware using any form of acetone silicones.
- Do not apply physical items (such as tools)directlytoproduct.
- Never use house-hold or commercial detergents, citrus based cleaners, or abrasive cleaners.
- Clean using a mild washing soap solution rinsed, and dry with a soft cloth.
- Check for any product defects before installation.
- Refer to the installation manual for correct installation.

SPECIFICATIONS

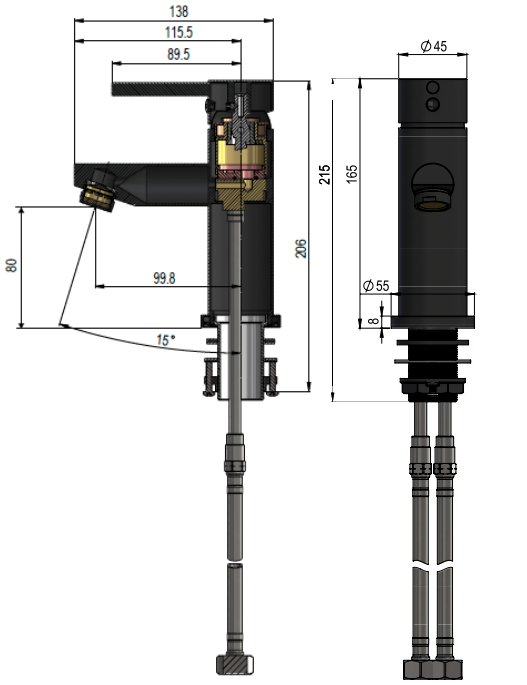

PINLESS HANDLE

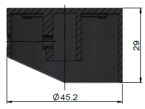

PADDLE HANDLE

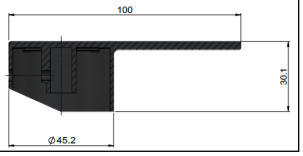

TOLERANCES

Surface Tolerance

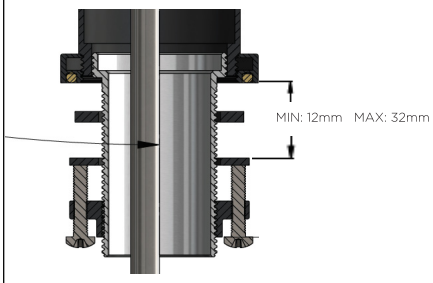

Hole Diameter

MIN: 34mm MAX: 42mm

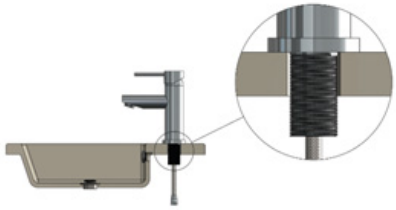

FLOW RATE GRAPH

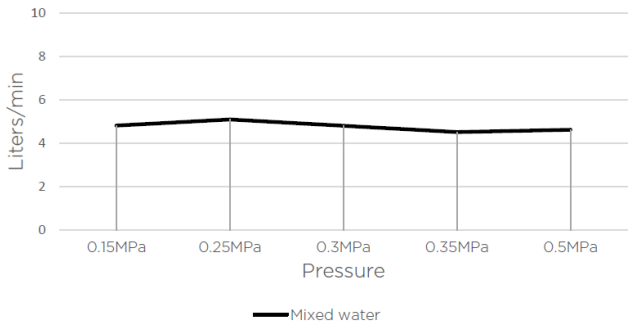

CREDENTIALS

- WaterMark AS/NZS 3718:2005
- 5-star WELS rated
- 5 litres p/minute
- WELS registration No: T16781

EXPLODED VIEW

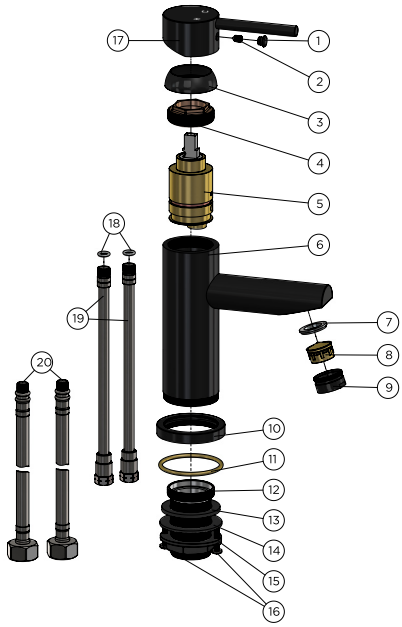

1. Decor knob
2. Screw
3. Decor cover
4. Nut
5. D35 cartridge
6. Welding body
7. Flat washer
8. Aerator
9. Aerator shell
10. Base
11. O-ring
12. Thread tube
13. Flat washer
14. Washer
15. Mount nut
16. Bolt
17. Handle
18. O-ring
19. Connecting tube
20. Inlet hosecor knob