fienza

VANESSA FULL DEPTH BASIN TOP - 1200MM - 1 TAP HOLE

Code	120VAN
Colour	Gloss White
Material	Poly-Marble
Install Type	Topmounted

Details

- Gloss warm white finish
- Rectangular bowl design
- 20 mm thick poly-marble
- 3 mm tile lip
- 12 o'clock tap hole
- Requires 32 mm non-overflow waste (available separately)

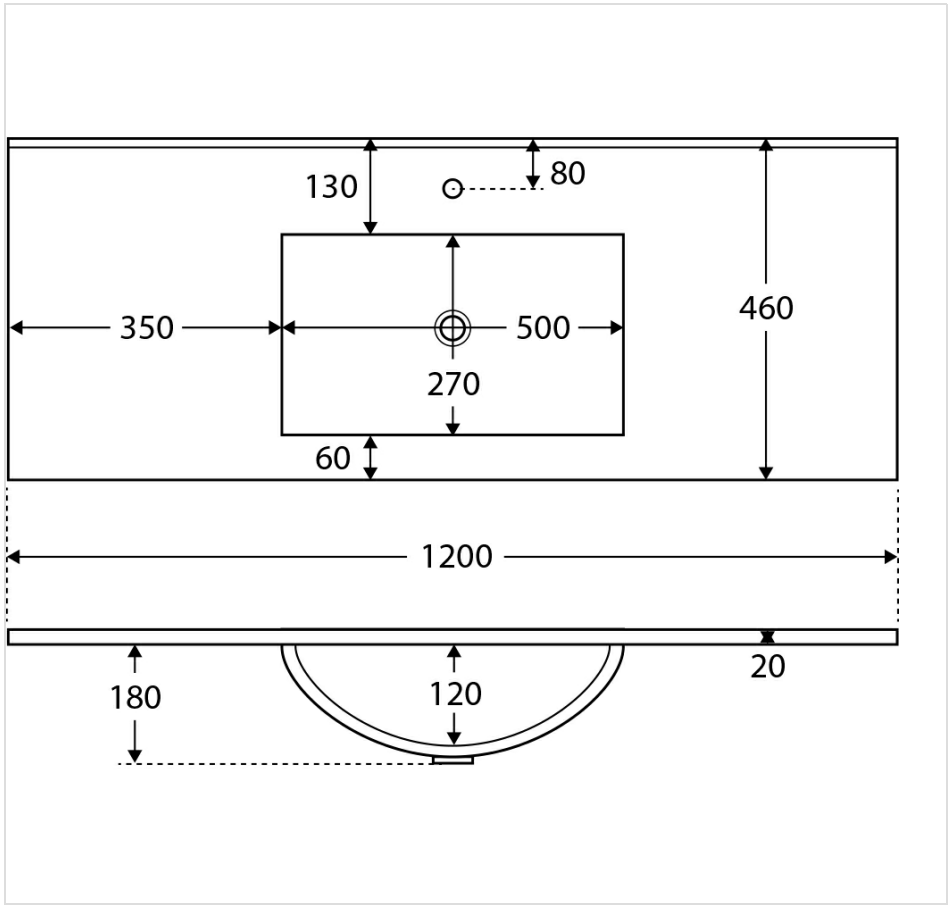



Product/Installation Notes

For ceramic products, please allow +/- 10mm tolerance for manufacturing variances.

Specifications

Overall Size	1200 mm (L) × 460 mm (W) × 180 mm (H)
Weight	21 kg
Warranty	Visit: **fienza.com.au/warranty** for more details
WELS Registration	N/A
WELS Flow Rating	N/A

We aim to ensure that specifications are correct at the time of publication. All measurements are shown in millimetres. Always use measurements of actual product received for final specification as the technical drawing may contain differences. Please note this product may have a visible printed FIENZA or Watermark logo. Due to printing limitations, physical colour may vary from the image shown. FIENZA reserves the right to make modifications without prior notice.