DOLCE FULL DEPTH BASIN TOP - 1200MM - SINGLE BOWL - 1 TAP HOLE - MATTE BLACK

Code	TCLB120
Colour	Matte Black
Material	Ceramic
Install Type	Topmounted

Details

- Matte black finish
- Rectangular bowl design
- 20 mm thick vitreous china
- 3 mm tile lip
- 12 o'clock tap hole
- Built-in overflow
- Matte black overflow ring included
- Requires 32 mm overflow waste (available separately)

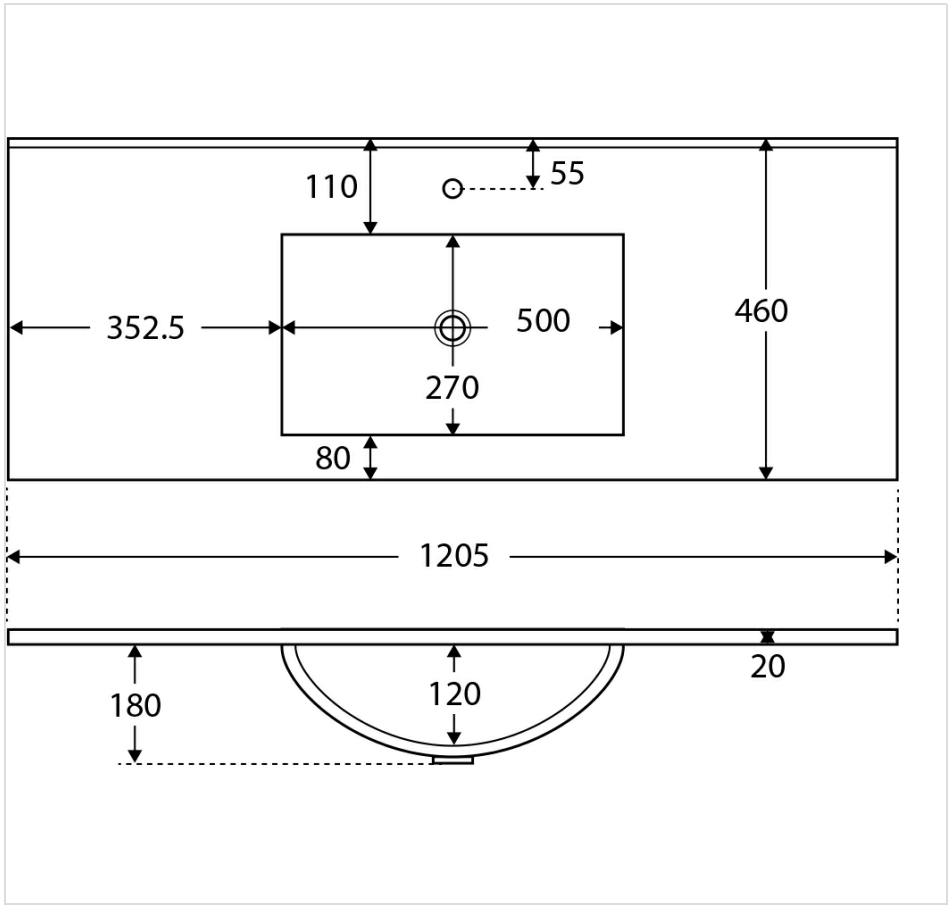



Specifications

Overall Size	1205 mm (L) × 460 mm (W) × 180 mm (H)
Weight	25 kg
Warranty	Visit: **fienza.com.au/warranty** for more details
WELS Registration	N/A
WELS Flow Rating	N/A

Product/Installation Notes

For ceramic products, please allow +/- 10mm tolerance for manufacturing variances.

We aim to ensure that specifications are correct at the time of publication. All measurements are shown in millimetres. Always use measurements of actual product received for final specification as the technical drawing may contain differences. Please note this product may have a visible printed FIENZA or Watermark logo. Due to printing limitations, physical colour may vary from the image shown. FIENZA reserves the right to make modifications without prior notice.