fienza

SATORI VANILLA FINGERPULL 900 FLOOR STANDING VANITY - LEFT DRAWERS - SATIN WHITE

Code	SATV90ZKL
Colour	Satin White
Material	Sustainably sourced timber
Install Type	Floor Standing

Details

Satori Moulded Basin Top:

- Unique vanilla finish
- 18-20mm thick concrete
- Concrete with food-grade nano coating
- Reversible for left or right facing bowl
- No overflow
- Requires 32mm non-overflow waste (WAS72 or WAS59; not included)

Fingerpull Wall Hung Cabinet:

- Satin white exterior (2pac; 70% matte, 30% gloss)
- Bright white interior
- Soft close doors and drawers
- Full extension drawer runners
- Solid 16mm backing board and drawer bases
- FSC approved, eco-friendly E0 quality board

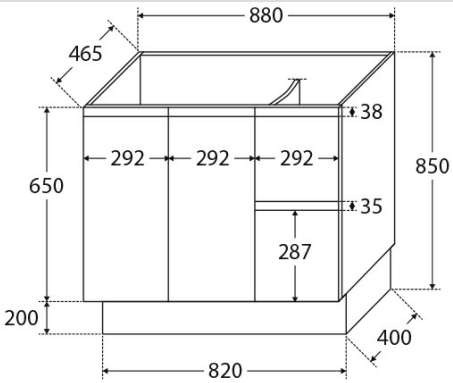

TOP VIEW: SHELF AREA & DRAWER AREA

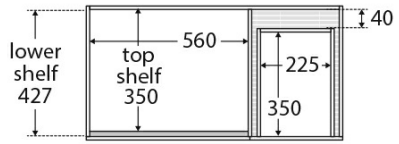

SIDE VIEW: SHELF STORAGE

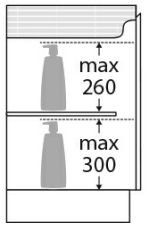

SIDE VIEW: RECESS & DRAWER STORAGE

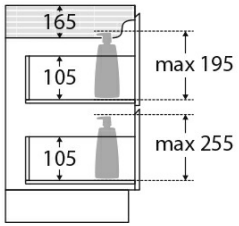



Product/Installation Notes

Please note that customers are responsible for verifying all specifications and measurements of product selections are compatible before ordering, including cabinetry, vanity tops, basins, custom basin positions, tap holes, plumbing, wastes, and related fittings.

Specifications

Overall Size	900 mm (L) × 465 mm (W) × 890 mm (H)
Weight	
Warranty	Visit: **fienza.com.au/warranty** for more details
WELS Registration	N/A
WELS Flow Rating	N/A

We aim to ensure that specifications are correct at the time of publication. All measurements are shown in millimetres. Always use measurements of actual product received for final specification as the technical drawing may contain differences. Please note this product may have a visible printed FIENZA or Watermark logo. Due to printing limitations, physical colour may vary from the image shown. FIENZA reserves the right to make modifications without prior notice.