fienza

SATORI FULL DEPTH CONCRETE BASIN TOP - 750MM - WARM GREY

Code	SAT75
Colour	Warm Grey
Material	Concrete
Install Type	Topmounted

Details

- Unique warm grey finish
- Concrete with food-grade nano coating
- Reversible for left or right facing bowl
- No tap hole
- Requires 32 mm non-overflow waste (available separately: WAS72)

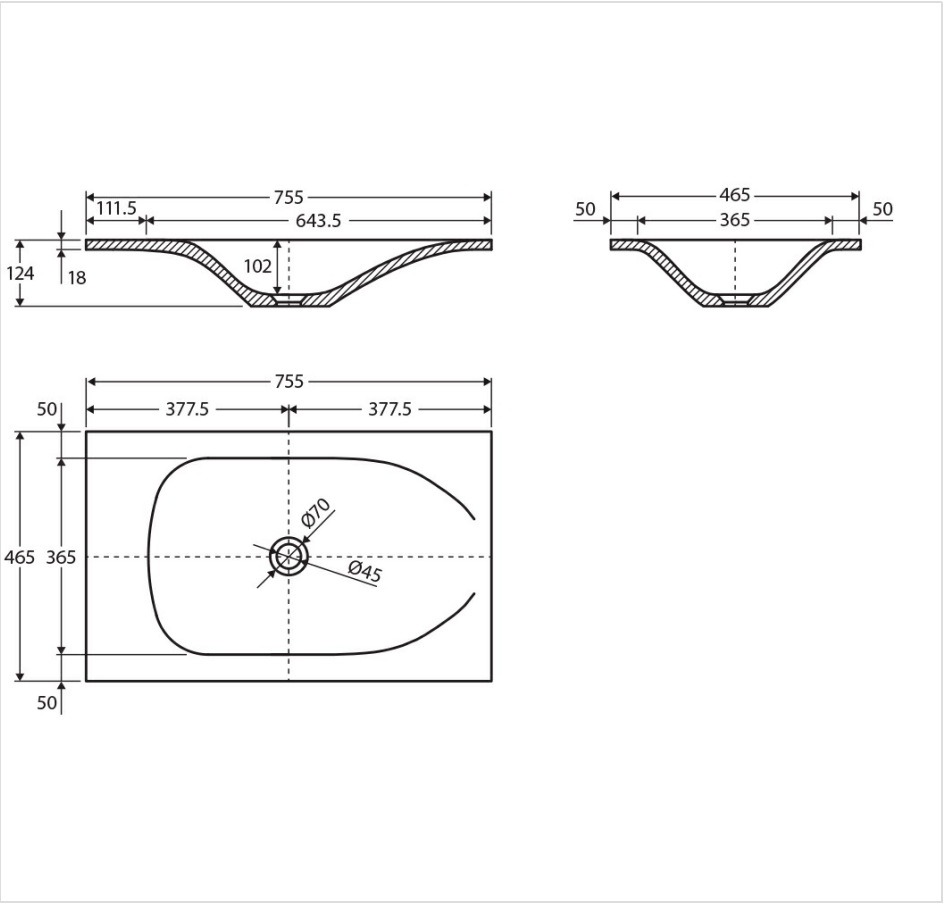



Product/Installation Notes

Reversible for left or right facing bowl. For ceramic products, please allow +/- 10mm tolerance for manufacturing variances.

Specifications

Overall Size	755 mm (L) × 465 mm (W) × 180 mm (H)
Weight	15.8 kg
Warranty	Visit: **fienza.com.au/warranty** for more details
WELS Registration	N/A
WELS Flow Rating	N/A

We aim to ensure that specifications are correct at the time of publication. All measurements are shown in millimetres. Always use measurements of actual product received for final specification as the technical drawing may contain differences. Please note this product may have a visible printed FIENZA or Watermark logo. Due to printing limitations, physical colour may vary from the image shown. FIENZA reserves the right to make modifications without prior notice.