fienza

EDEN PILL ABOVE COUNTER BASIN - MATTE WHITE

Code	RB510MW
Colour	Matte White
Material	Vitreous China
Install Type	Above Counter

Details

- Matte white finish
- Designed to match Eden baths (FR32-1550 / FR32-1750)
- 15mm soft curved top edge
- Bottom rim for easy cleaning
- Recessed waste hole to suit Flat ceramic waste caps
- Matching ceramic Flat & Dome cap pop-up wastes available
- Vitreous china
- No tap hole or overflow
- Requires 32mm non-overflow waste (not included)

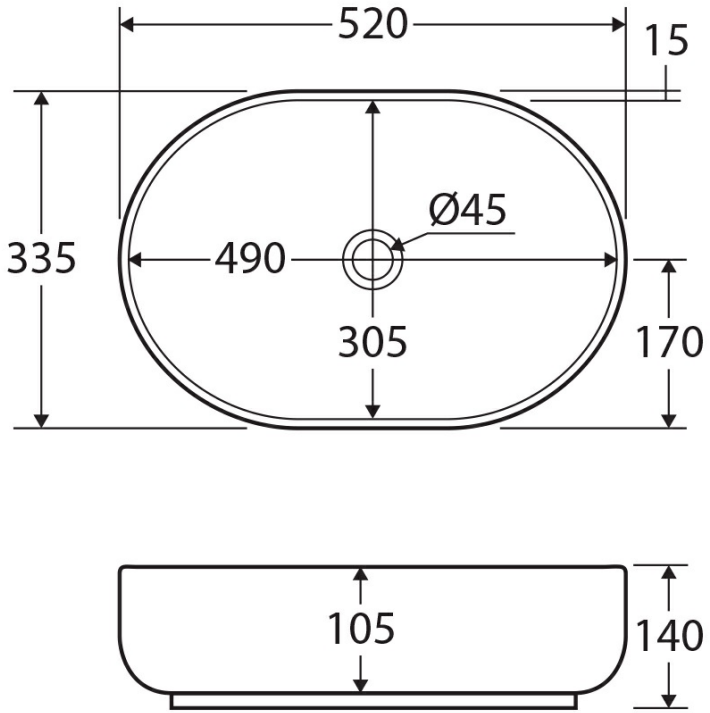



Product/Installation Notes

Requires waste - available separately.

Specifications

Overall Size	490 mm (L) × 335 mm (W) × 140 mm (H)
Weight	8 kg
Warranty	Visit: **fienza.com.au/warranty** for more details
WELS Registration	N/A
WELS Flow Rating	N/A

We aim to ensure that specifications are correct at the time of publication. All measurements are shown in millimetres. Always use measurements of actual product received for final specification as the technical drawing may contain differences. Please note this product may have a visible printed FIENZA or Watermark logo. Due to printing limitations, physical colour may vary from the image shown. FIENZA reserves the right to make modifications without prior notice.