fienza

DENZEL SLIM ENSUITE DEPTH BASIN TOP

Code	RB4525
Colour	Gloss White
Material	Ceramic
Install Type	Topmounted

Details

- Gloss white finish
- Designed for Riley & Edge cabinets only
- Reversible design for left or right tap position
- 1 tap hole
- Requires 32 mm non-overflow waste (available separately)
- Made from vitreous china

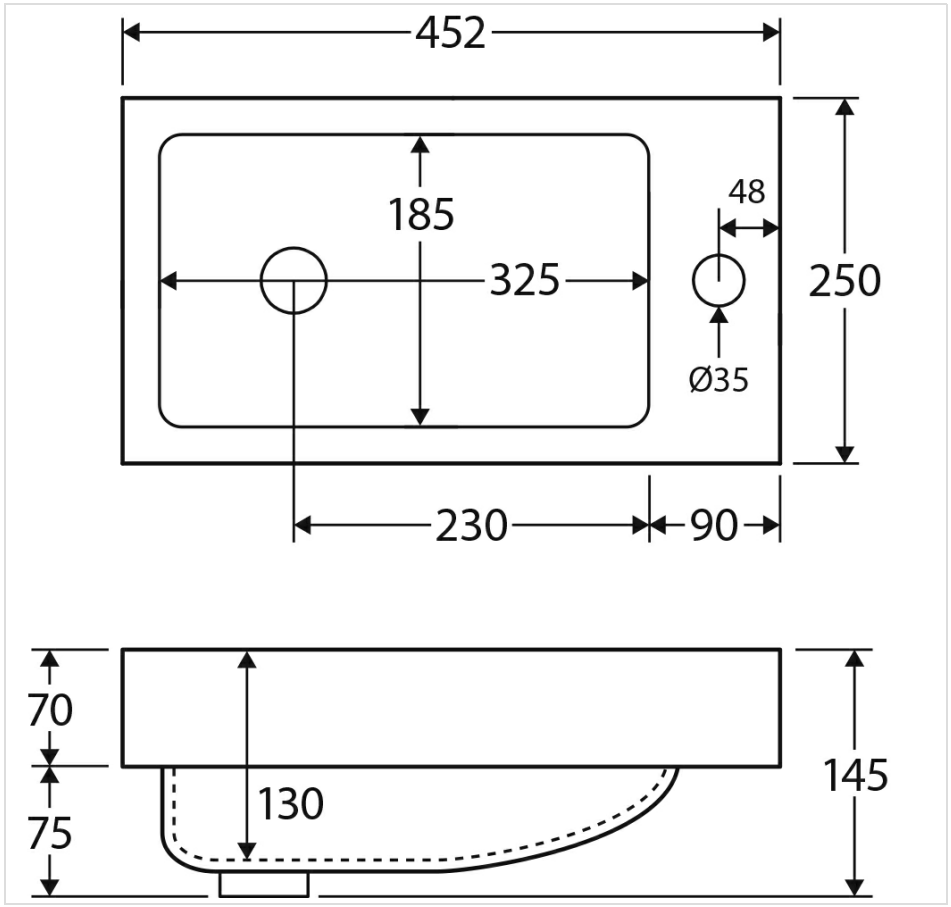



Product/Installation Notes

For ceramic products, please allow +/- 10mm tolerance for manufacturing variances.

Specifications

Overall Size	452 mm (L) × 250 mm (W) × 145 mm (H)
Weight	7.2 kg
Warranty	Visit: **fienza.com.au/warranty** for more details
WELS Registration	N/A
WELS Flow Rating	N/A

We aim to ensure that specifications are correct at the time of publication. All measurements are shown in millimetres. Always use measurements of actual product received for final specification as the technical drawing may contain differences. Please note this product may have a visible printed FIENZA or Watermark logo. Due to printing limitations, physical colour may vary from the image shown. FIENZA reserves the right to make modifications without prior notice.