fienza

KOKO 465 ABOVE COUNTER BASIN - MATTE BLACK

Code	RB185B
Colour	Matte Black
Material	Vitreous China
Install Type	Above Counter

Details

- Soft rectangular, thin edge design
- Matte black finish
- Vitreous china
- Glazed on the back side
- No tap hole or overflow
- Requires 32mm waste without overflow (not included)
- Matching ceramic cap pop-up wastes also available

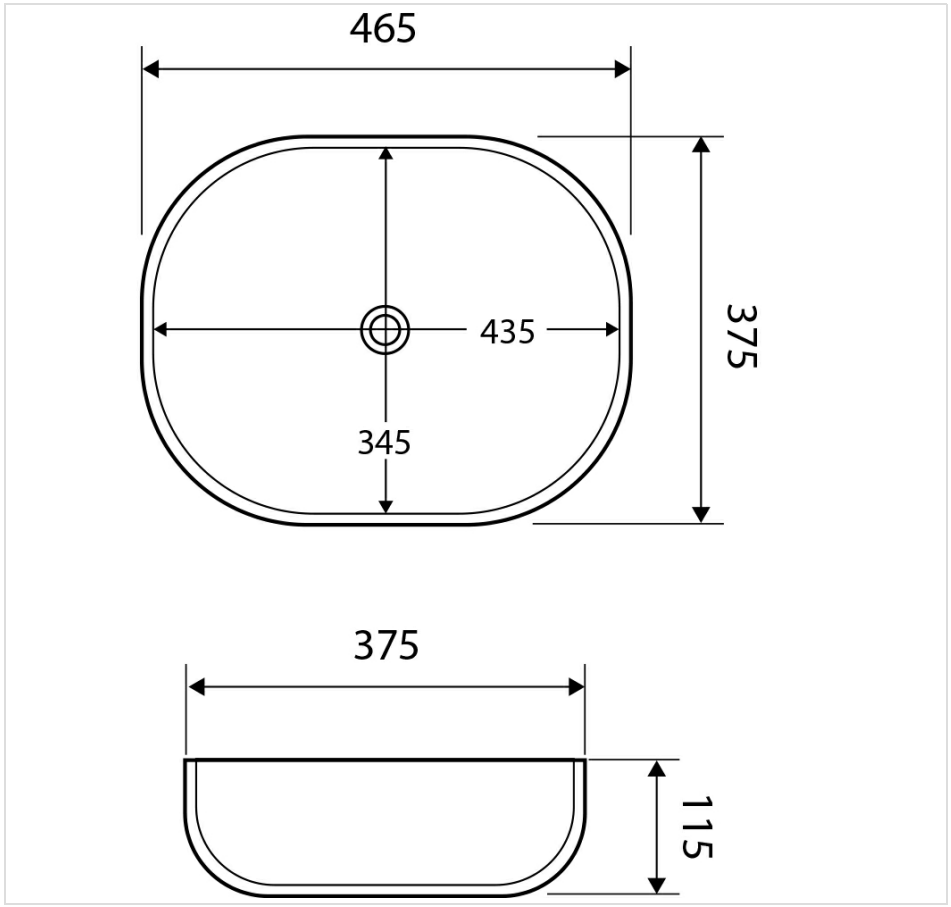



Product/Installation Notes

Requires waste - available separately.

Specifications

Overall Size	465 mm (L) × 375 mm (W) × 115 mm (H)
Weight	8.7 kg
Warranty	Visit: **fienza.com.au/warranty** for more details
WELS Registration	N/A
WELS Flow Rating	N/A

We aim to ensure that specifications are correct at the time of publication. All measurements are shown in millimetres. Always use measurements of actual product received for final specification as the technical drawing may contain differences. Please note this product may have a visible printed FIENZA or Watermark logo. Due to printing limitations, physical colour may vary from the image shown. FIENZA reserves the right to make modifications without prior notice.