fienza

# MONTANA FINGERPULL 900 WALL HUNG VANITY - RIGHT DRAWERS - SATIN BLACK

| | |
|---|---|
| **Code** | MON90ZBR |
| **Colour** | Satin Black |
| **Material** | Sustainably sourced timber |
| **Install Type** | Wall Hung |

## Details

**Montana Moulded Basin Top:**

- Matte black finish
- 15mm thick textured solid surface
- Overflow
- 12 o'clock tap hole as standard (also available with 3 tap holes at additional cost)
- Requires 32mm overflow waste (available separately)

**Fingerpull Wall Hung Cabinet:**

- Satin black exterior (2pac; 70% matte, 30% gloss)
- Bright white interior
- Soft close doors and drawers
- Full extension drawer runners
- Solid 16mm backing board and drawer bases
- FSC approved, eco-friendly E0 quality board

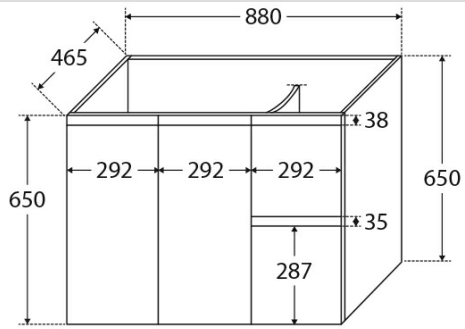


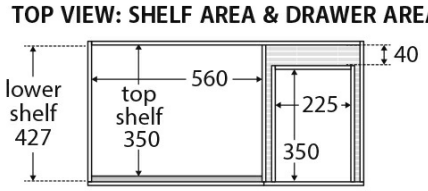


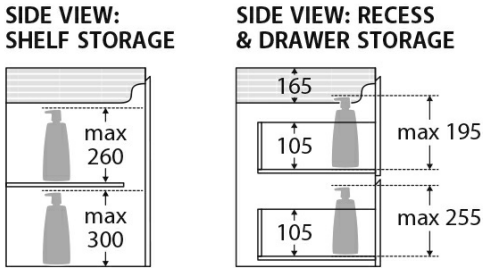




## Specifications

| | |
|---|---|
| **Overall Size** | 880 mm (L) × 460 mm (W) × 580 mm (H) |
| **Weight** | |
| **Warranty** | Visit: **fienza.com.au/warranty** for more details |
| **WELS Registration** | N/A |
| **WELS Flow Rating** | N/A |

## Product/Installation Notes

Please note that customers are responsible for verifying all specifications and measurements of product selections are compatible before ordering, including cabinetry, vanity tops, basins, custom basin positions, tap holes, plumbing, wastes, and related fittings.

We aim to ensure that specifications are correct at the time of publication. All measurements are shown in millimetres. Always use measurements of actual product received for final specification as the technical drawing may contain differences. Please note this product may have a visible printed FIENZA or Watermark logo. Due to printing limitations, physical colour may vary from the image shown. FIENZA reserves the right to make modifications without prior notice.