MINKA CURVED 1200 WALL HUNG CABINET - SATIN WHITE

Code	120UW-C
Colour	Satin White
Material	Water Resistant Plywood
Install Type	Wall Hung

Details

- Polyurethane satin white finish
- Curved feature corners combined with elegant vertical fluting
- Wall hung, double drawer design
- Soft close drawer with full extension runners
- Requires one of Fienza's curved vanity top options and over-the-top Edge handles (available separately)
- Premium interior finish
- 16 mm thick backing boards and drawer bases
- Made from extra durable, highly water resistant plywood

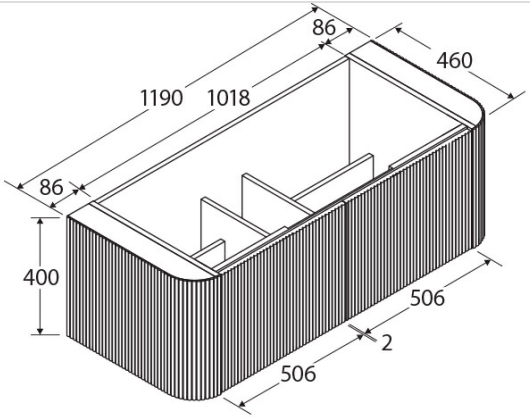

TOP VIEW: DRAWER AREA

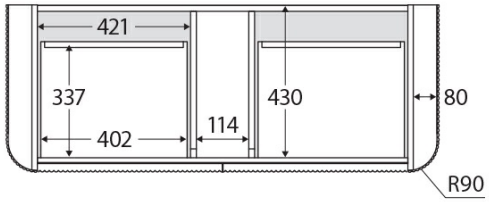

SIDE VIEW:
DRAWER STORAGE

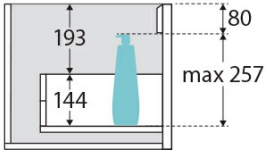



Product/Installation Notes

Cabinet only. Does not include vanity top or handles. Please note that customers are responsible for verifying all specifications and measurements of product selections are compatible before ordering, including cabinetry, vanity tops, basins, custom basin positions, tap holes, plumbing, wastes, and related fittings.

Specifications

Overall Size	1190 mm (L) × 460 mm (W) × 400 mm (H)
Weight	
Warranty	Visit: **fienza.com.au/warranty** for more details
WELS Registration	N/A
WELS Flow Rating	N/A

We aim to ensure that specifications are correct at the time of publication. All measurements are shown in millimetres. Always use measurements of actual product received for final specification as the technical drawing may contain differences. Please note this product may have a visible printed FIENZA or Watermark logo. Due to printing limitations, physical colour may vary from the image shown. FIENZA reserves the right to make modifications without prior notice.