fienza

MILA SHAKER CURVED 1200 WALL HUNG CABINET

Code	120CM
Colour	Satin White
Material	Sustainably Sourced Timber
Install Type	Wall Hung

Details

- Satin white finish
- Curved feature corners combined with shaker-style recess
- Wall hung, single drawer design
- Soft close drawer with full extension runners
- Requires one of Fienza's curved vanity top options and over-the-top Edge handles (available separately)
- Premium grey interior finish
- 16 mm thick backing boards and drawer bases
- Made from sustainably sourced timber

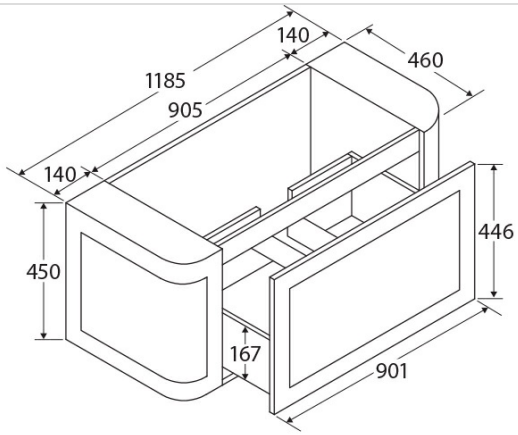

TOP VIEW: DRAWER AREA

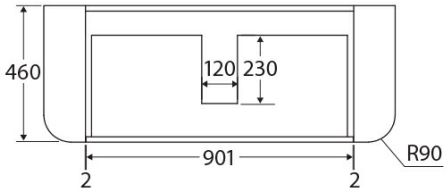

SIDE VIEW: DRAWER STORAGE

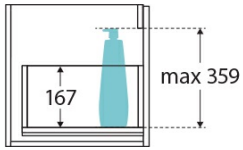



Product/Installation Notes

Cabinet only. Does not include vanity top or handles (required). Please note that customers are responsible for verifying all specifications and measurements of product selections are compatible before ordering, including cabinetry, vanity tops, basins, custom basin positions, tap holes, plumbing, wastes, and related fittings.

Specifications

Overall Size	1185 mm (L) × 450 mm (W) × 450 mm (H)
Weight	
Warranty	Visit: **fienza.com.au/warranty** for more details
WELS Registration	N/A
WELS Flow Rating	N/A

We aim to ensure that specifications are correct at the time of publication. All measurements are shown in millimetres. Always use measurements of actual product received for final specification as the technical drawing may contain differences. Please note this product may have a visible printed FIENZA or Watermark logo. Due to printing limitations, physical colour may vary from the image shown. FIENZA reserves the right to make modifications without prior notice.