fienza

# MILA SHAKER 1200 WALL HUNG CABINET

| | |
|---|---|
| **Code** | 120M |
| **Colour** | Satin White |
| **Material** | Sustainably Sourced Timber |
| **Install Type** | Wall Hung |

## Details

- High quality, satin white exterior with bright white interior
- Soft close doors and drawers
- Requires handles (not included)
- 16 mm thick backing boards and drawer bases
- FSC certified, eco-friendly EO board

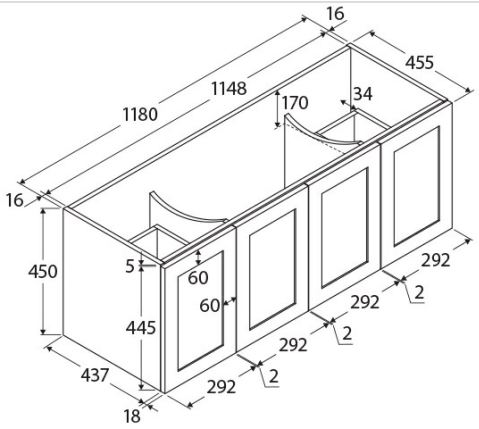


NOTE: HANDLES REQUIRED

TOP VIEW: SHELF AREA
& DRAWER AREA

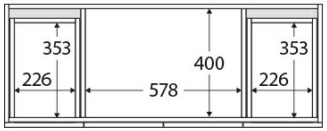


SIDE VIEW: RECESS
& SHELF STORAGE

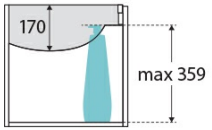


SIDE VIEW:
DRAWER STORAGE

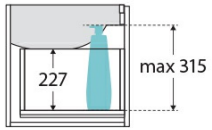




## Product/Installation Notes

Cabinet only. Does not include vanity top or handles. Please note that customers are responsible for verifying all specifications and measurements of product selections are compatible before ordering, including cabinetry, vanity tops, basins, custom basin positions, tap holes, plumbing, wastes, and related fittings.

## Specifications

| | |
|---|---|
| **Overall Size** | 1180 mm (L) × 455 mm (W) × 450 mm (H) |
| **Weight** | |
| **Warranty** | Visit: **fienza.com.au/warranty** for more details |
| **WELS Registration** | N/A |
| **WELS Flow Rating** | N/A |

We aim to ensure that specifications are correct at the time of publication. All measurements are shown in millimetres. Always use measurements of actual product received for final specification as the technical drawing may contain differences. Please note this product may have a visible printed FIENZA or Watermark logo. Due to printing limitations, physical colour may vary from the image shown. FIENZA reserves the right to make modifications without prior notice.