fienza

JOLI FULL DEPTH BASIN TOP - 600MM - 1 TAP HOLE - GLOSS WHITE

Code	JOL60
Colour	Gloss White
Material	Ceramic
Install Type	Topmounted

Details

- Gloss white finish
- Soft curve bowl design
- 18 mm thick vitreous china
- 3 mm tile lip
- 12 o'clock tap hole
- Built-in overflow
- Chrome overflow ring included
- Requires 32 mm overflow waste (available separately)

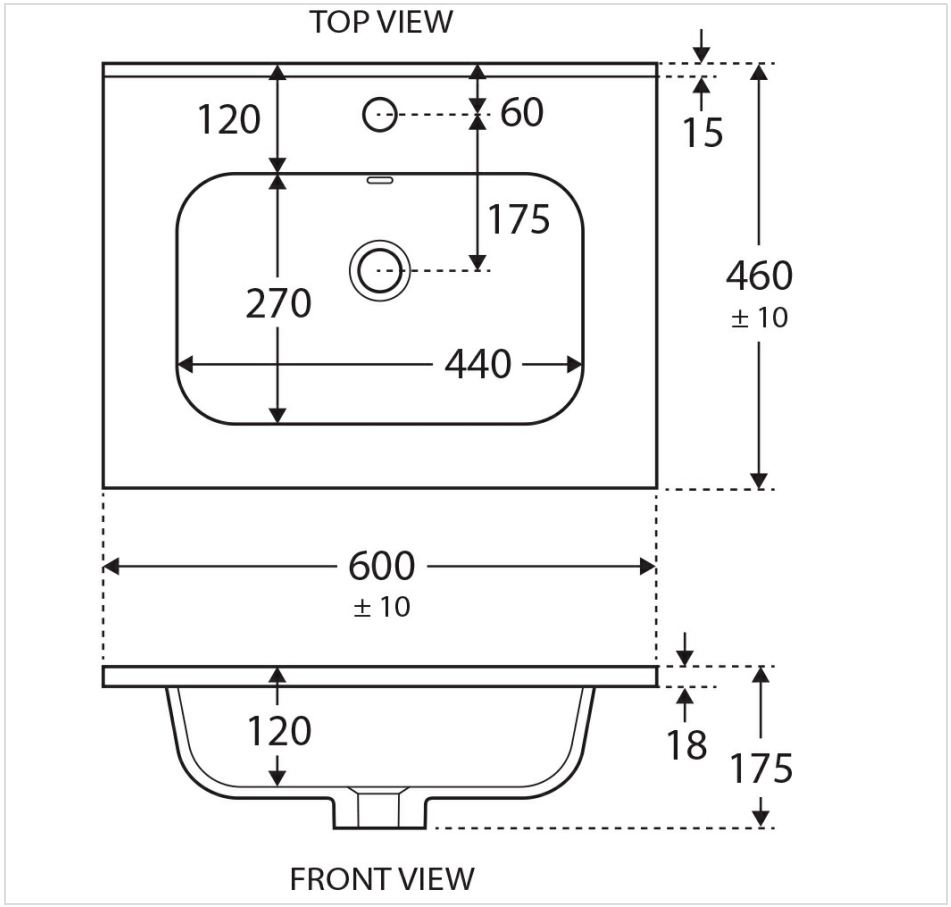



Product/Installation Notes

For ceramic products, please allow +/- 10mm tolerance for manufacturing variances.

Specifications

Overall Size	600 mm (L) × 470 mm (W) × 175 mm (H)
Weight	12.5 kg
Warranty	Visit: **fienza.com.au/warranty** for more details
WELS Registration	N/A
WELS Flow Rating	N/A

We aim to ensure that specifications are correct at the time of publication. All measurements are shown in millimetres. Always use measurements of actual product received for final specification as the technical drawing may contain differences. Please note this product may have a visible printed FIENZA or Watermark logo. Due to printing limitations, physical colour may vary from the image shown. FIENZA reserves the right to make modifications without prior notice.