fienza

HELEN JUNIOR ABOVE COUNTER BASIN

Code	TR4148
Colour	Gloss White
Material	Vitreous China
Install Type	Above Counter

Details

- Gloss white finish
- Vitreous china
- Glazed on the back side
- One tap hole with overflow
- Requires 32 mm waste with overflow (not included)
- Can be wall mounted (bolts included)

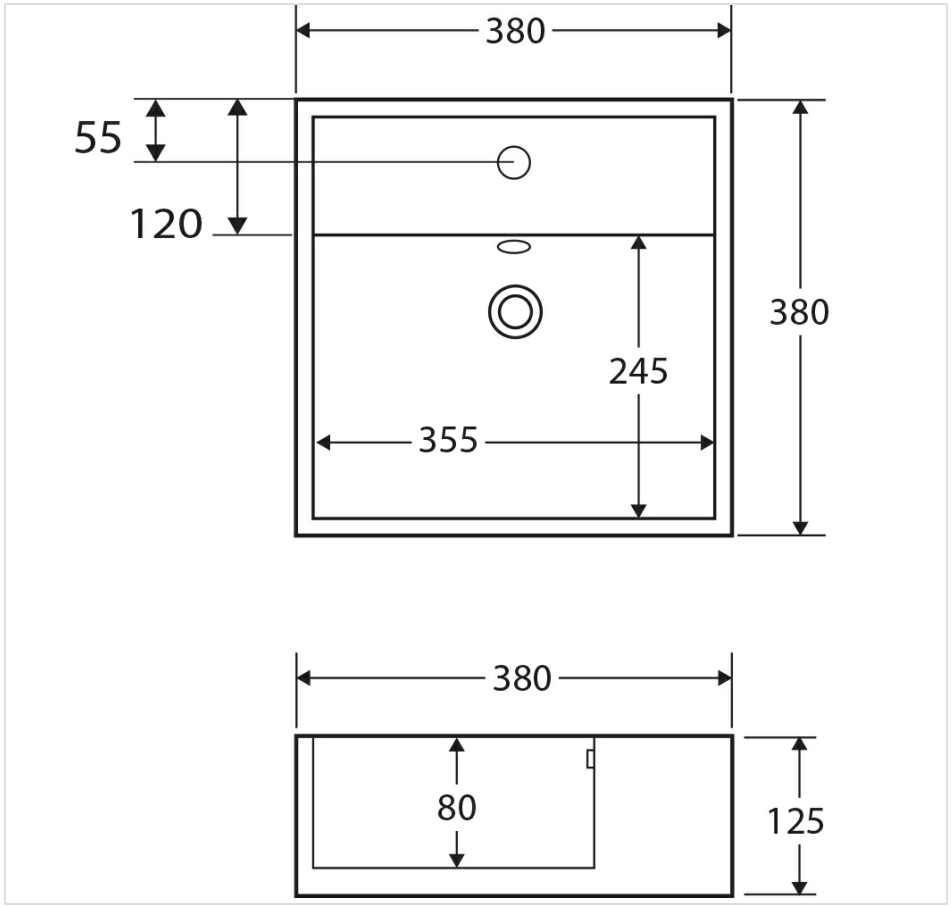



Product/Installation Notes

Not suitable to have mirror installed directly behind basin (bolt holes visible on back side)

Specifications

Overall Size	380 mm (L) × 380 mm (W) × 125 mm (H)
Weight	9.3 kg
Warranty	Visit: **fienza.com.au/warranty** for more details
WELS Registration	N/A
WELS Flow Rating	N/A

We aim to ensure that specifications are correct at the time of publication. All measurements are shown in millimetres. Always use measurements of actual product received for final specification as the technical drawing may contain differences. Please note this product may have a visible printed FIENZA or Watermark logo. Due to printing limitations, physical colour may vary from the image shown. FIENZA reserves the right to make modifications without prior notice.