fienza

SNOWFLAKE SOLID SURFACE TOP - ENSUITE DEPTH - 900MM

Code	531-152
Colour	Snowflake
Material	Solid Surface
Install Type	Topmounted

Details

- Made from velvet-smooth solid surface material (100% silica free)
- Non-porous surface with higher stain resistance than natural stone
- Resistant to heat chemicals moisture chips and cracks
- Hygienic easy to clean and maintain
- Can easily be repaired if scratched
- Warmer to touch when compared to engineered stone
- Full benchtop only - tap hole and basin hole cuts may attract additional charges
- Suits Fienza rectangular ensuite depth vanities

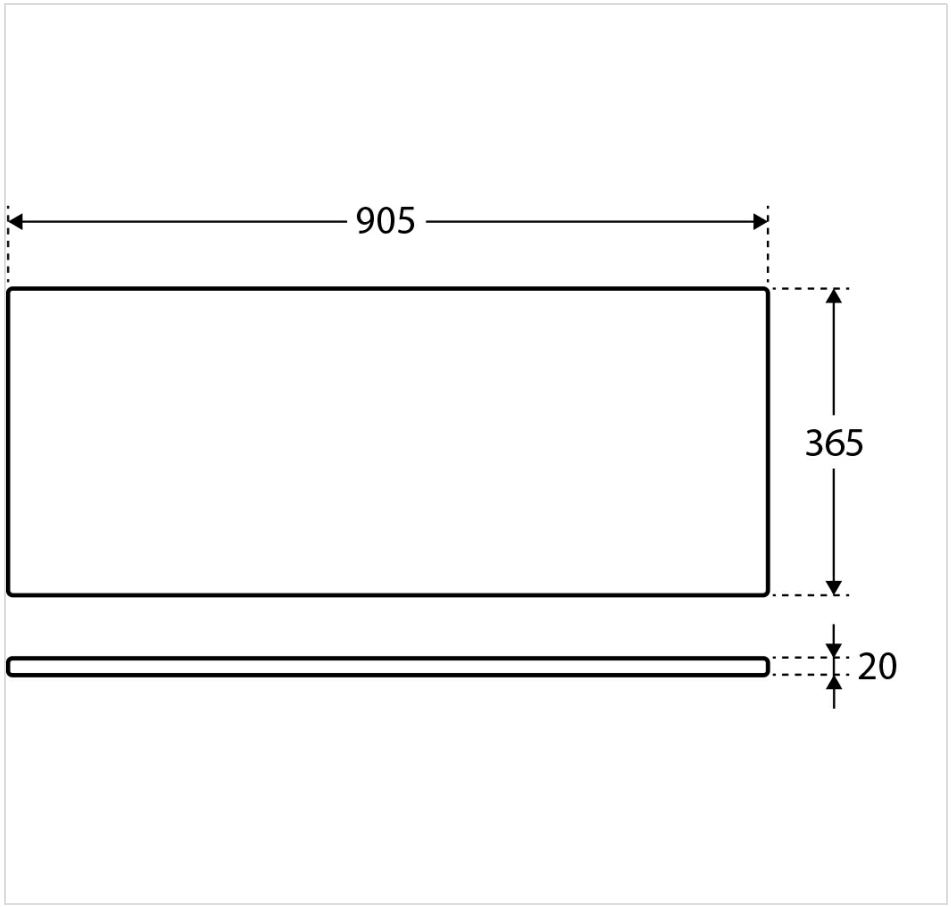

Specifications

Overall Size	
Weight	
Warranty	Visit: **fienza.com.au/warranty** for more details
WELS Registration	N/A
WELS Flow Rating	N/A

Product/Installation Notes

N/A

We aim to ensure that specifications are correct at the time of publication. All measurements are shown in millimetres. Always use measurements of actual product received for final specification as the technical drawing may contain differences. Please note this product may have a visible printed FIENZA or Watermark logo. Due to printing limitations, physical colour may vary from the image shown. FIENZA reserves the right to make modifications without prior notice.