fienza

LOLA MATTE MINKA CURVED 900 WALL HUNG VANITY - SATIN WHITE

Code	LOLM90UW
Colour	Satin White
Material	Highly water resistant plywood
Install Type	Wall Hung

Details

Lola Moulded Basin Top:

- Matte white
- Pill-shaped bowl design
- 18 mm thick vitreous china
- 12 o'clock tap hole as standard (also available with no tap hole or 3 tap holes; 3 tap holes incurs additional cost)
- Built-in overflow (located on inner bowl opposite wall)
- Requires 32 mm overflow waste (not included)
- Designed to suit all Fienza curved vanity cabinets

Minka Curved Wall Hung Cabinet:

- Satin white
- Curved feature corners combined with elegant vertical fluting
- Single drawer
- Soft close drawers with full extension runners
- Requires over-the-top Edge handles (available separately)
- Premium interior finish
- 16 mm thick backing boards and drawer bases
- Made from extra durable, highly water resistant plywood

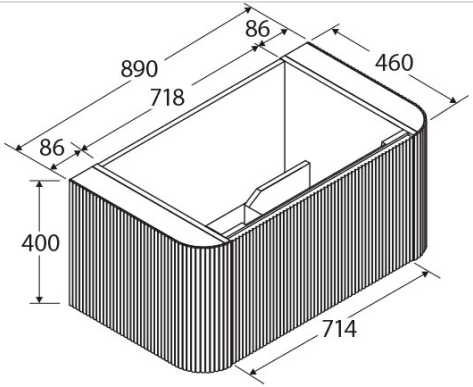

TOP VIEW: DRAWER AREA

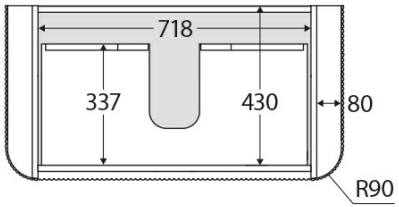

SIDE VIEW:
DRAWER STORAGE

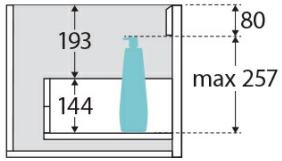



Product/Installation Notes

Cabinet requires handles (not included). Please note that customers are responsible for verifying all specifications and measurements of product selections are compatible before ordering, including cabinetry, vanity tops, basins, custom basin positions, tap holes, plumbing, wastes, and related fittings.

Specifications

Overall Size	905 mm (L) × 465 mm (W) × 418 mm (H)
Weight	
Warranty	Visit: **fienza.com.au/warranty** for more details
WELS Registration	N/A
WELS Flow Rating	N/A

We aim to ensure that specifications are correct at the time of publication. All measurements are shown in millimetres. Always use measurements of actual product received for final specification as the technical drawing may contain differences. Please note this product may have a visible printed FIENZA or Watermark logo. Due to printing limitations, physical colour may vary from the image shown. FIENZA reserves the right to make modifications without prior notice.