fienza

ROTONDO HAMPTON 900 FLOOR STANDING VANITY

Code	ROT90TK
Colour	Satin White
Material	Sustainably sourced timber
Install Type	Floor Standing

Details

Rotondo Moulded Basin Top:

- Gloss white
- 20mm thick vitreous china
- 3mm tile lip
- Traditional oval bowl with softly bevelled edge
- Built-in overflow with chrome overflow ring
- 12 o'clock tap hole as standard (also available with 3 tap holes at additional cost)
- Requires 32mm overflow waste (available separately)

Hampton Cabinet:

- Satin white exterior and interior
- Discrete pull channels for easy opening without handles
- Soft close drawers
- Full extension drawer runners
- 16 mm thick backing boards and drawer bases
- Made from FSC certified, eco-friendly E0 board

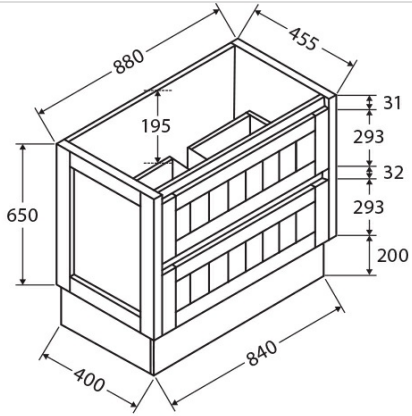

TOP VIEW: DRAWERS

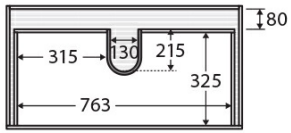

SIDE VIEW: RECESS & DRAWER STORAGE

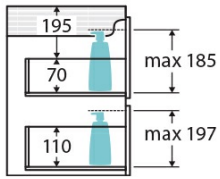



Product/Installation Notes

Please note that customers are responsible for verifying all specifications and measurements of product selections are compatible before ordering, including cabinetry, vanity tops, basins, custom basin positions, tap holes, plumbing, wastes, and related fittings.

Specifications

Overall Size	910 mm (L) × 460 mm (W) × 870 mm (H)
Weight	
Warranty	Visit: **fienza.com.au/warranty** for more details
WELS Registration	N/A
WELS Flow Rating	N/A

We aim to ensure that specifications are correct at the time of publication. All measurements are shown in millimetres. Always use measurements of actual product received for final specification as the technical drawing may contain differences. Please note this product may have a visible printed FIENZA or Watermark logo. Due to printing limitations, physical colour may vary from the image shown. FIENZA reserves the right to make modifications without prior notice.