fienza

FINGERPULL 900 FLOOR STANDING CABINET - RIGHT DRAWERS - SATIN WHITE

Code	90ZKR
Colour	Satin White
Material	Sustainably Sourced Timber
Install Type	Floor Standing

Details

- 2pac satin white exterior (70% matte, 30% gloss)
- Bright white interior
- U-shape fingerpull channel
- Soft close doors and drawers
- Full extension drawer runners
- 16 mm thick backing boards and drawer bases

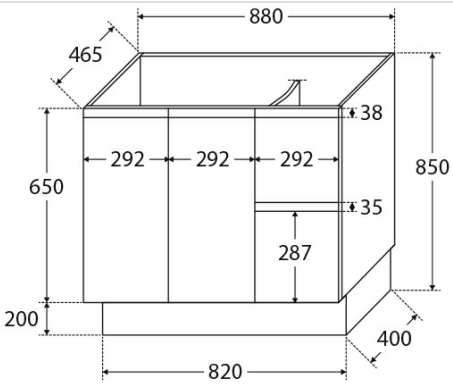

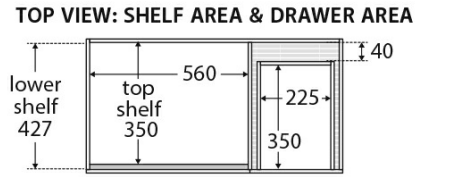

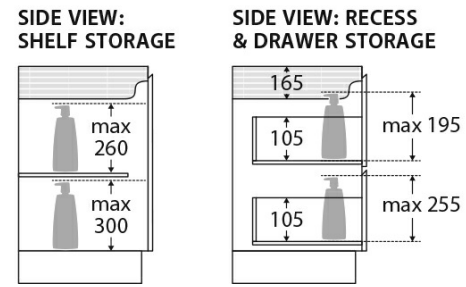



Specifications

Overall Size	880 mm (L) × 460 mm (W) × 870 mm (H)
Weight	
Warranty	Visit: **fienza.com.au/warranty** for more details
WELS Registration	N/A
WELS Flow Rating	N/A

Product/Installation Notes

Cabinet only. Does not include vanity top. Please note that customers are responsible for verifying all specifications and measurements of product selections are compatible before ordering, including cabinetry, vanity tops, basins, custom basin positions, tap holes, plumbing, wastes, and related fittings.

We aim to ensure that specifications are correct at the time of publication. All measurements are shown in millimetres. Always use measurements of actual product received for final specification as the technical drawing may contain differences. Please note this product may have a visible printed FIENZA or Watermark logo. Due to printing limitations, physical colour may vary from the image shown. FIENZA reserves the right to make modifications without prior notice.