fienza

JOLI ALINA SATIN WHITE 900 WALL HUNG VANITY

Code	JOL90RW
Colour	Satin White
Material	Sustainably sourced timber
Install Type	Wall Hung

Details

Joli Moulded Basin Top:

- Gloss white
- 18mm thick vitreous china
- 3mm tile lip
- Softly curved bowl design
- Built-in overflow with chrome overflow ring
- 12 o'clock tap hole as standard (also available with 3 tap holes at additional cost)
- Requires 32mm overflow waste (available separately)

Alina Wall Hung Cabinet:

- Satin white
- Edge finger-pull opening
- Soft close doors and drawers (1200 mm has soft close centre door)
- Full extension drawer runners
- 16 mm thick backing boards and drawer bases
- Made from sustainably sourced timber

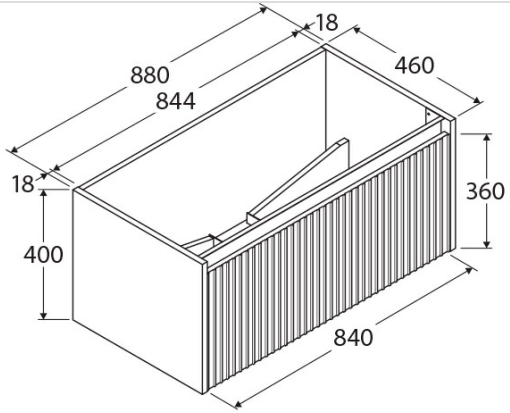

TOP VIEW: DRAWER AREA

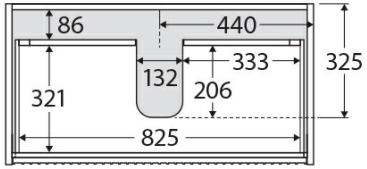

SIDE VIEW:
DRAWER STORAGE

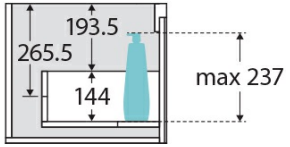



Product/Installation Notes

Please note that customers are responsible for verifying all specifications and measurements of product selections are compatible before ordering, including cabinetry, vanity tops, basins, custom basin positions, tap holes, plumbing, wastes, and related fittings.

Specifications

Overall Size	900 mm (L) × 470 mm (W) × 420 mm (H)
Weight	
Warranty	Visit: **fienza.com.au/warranty** for more details
WELS Registration	N/A
WELS Flow Rating	N/A

We aim to ensure that specifications are correct at the time of publication. All measurements are shown in millimetres. Always use measurements of actual product received for final specification as the technical drawing may contain differences. Please note this product may have a visible printed FIENZA or Watermark logo. Due to printing limitations, physical colour may vary from the image shown. FIENZA reserves the right to make modifications without prior notice.