JOLI EDGE WALNUT 750 WALL HUNG VANITY - RIGHT DRAWERS

Code	JOL75WAR
Colour	Walnut
Material	Sustainably sourced timber
Install Type	Wall Hung

Details

Joli Moulded Basin Top:

- Gloss white
- 18mm thick vitreous china
- 3mm tile lip
- Softly curved bowl design
- Built-in overflow with chrome overflow ring
- 12 o'clock tap hole as standard (also available with 3 tap holes at additional cost)
- Requires 32mm overflow waste (available separately)

Edge Wall Hung Cabinet:

- Walnut textured print on interior and exterior
- Edge finger-pull opening
- Soft close doors and drawers
- Full extension drawer runners
- 16 mm thick backing boards and drawer bases

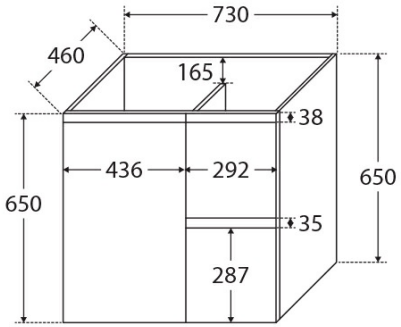

TOP VIEW: SHELF AREA & DRAWER AREA

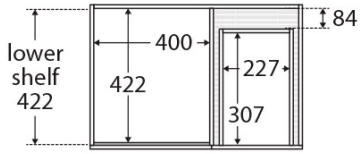

SIDE VIEW: SHELF STORAGE

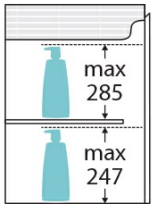

SIDE VIEW: RECESS & DRAWER STORAGE

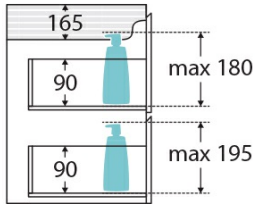



Product/Installation Notes

Please note that customers are responsible for verifying all specifications and measurements of product selections are compatible before ordering, including cabinetry, vanity tops, basins, custom basin positions, tap holes, plumbing, wastes, and related fittings.

Specifications

Overall Size	750 mm (L) × 470 mm (W) × 670 mm (H)
Weight	
Warranty	Visit: **fienza.com.au/warranty** for more details
WELS Registration	N/A
WELS Flow Rating	N/A

We aim to ensure that specifications are correct at the time of publication. All measurements are shown in millimetres. Always use measurements of actual product received for final specification as the technical drawing may contain differences. Please note this product may have a visible printed FIENZA or Watermark logo. Due to printing limitations, physical colour may vary from the image shown. FIENZA reserves the right to make modifications without prior notice.