# ROTONDO EDGE INDUSTRIAL 750 WALL HUNG VANITY - RIGHT DRAWERS

| | |
|---|---|
| **Code** | ROT75XR |
| **Colour** | Industrial |
| **Material** | Sustainably sourced timber |
| **Install Type** | Wall Hung |

## Details

**Rotondo Moulded Basin Top:**

- Gloss white
- 20mm thick vitreous china
- 3mm tile lip
- Traditional oval bowl with softly bevelled edge
- Built-in overflow with chrome overflow ring
- 12 o'clock tap hole as standard (also available with 3 tap holes at additional cost)
- Requires 32mm overflow waste (available separately)

**Edge Wall Hung Cabinet:**

- Industrial textured print on interior and exterior
- Edge finger-pull opening
- Soft close doors and drawers
- Full extension drawer runners
- 16 mm thick backing boards and drawer bases

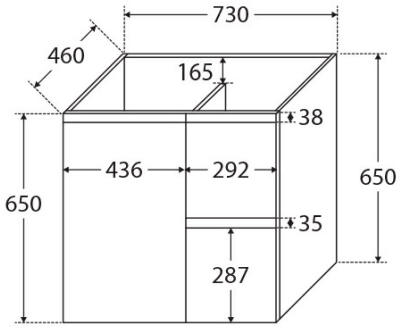


**TOP VIEW: SHELF AREA & DRAWER AREA**

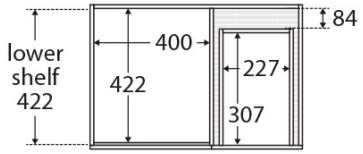


**SIDE VIEW: SHELF STORAGE**

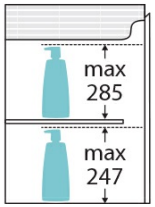


**SIDE VIEW: RECESS & DRAWER STORAGE**

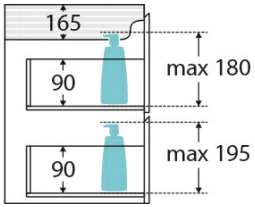




## Product/Installation Notes

Please note that customers are responsible for verifying all specifications and measurements of product selections are compatible before ordering, including cabinetry, vanity tops, basins, custom basin positions, tap holes, plumbing, wastes, and related fittings.

## Specifications

| | |
|---|---|
| **Overall Size** | 730 mm (L) × 460 mm (W) × 650 mm (H) |
| **Weight** | |
| **Warranty** | Visit: **fienza.com.au/warranty** for more details |
| **WELS Registration** | N/A |
| **WELS Flow Rating** | N/A |

We aim to ensure that specifications are correct at the time of publication. All measurements are shown in millimetres. Always use measurements of actual product received for final specification as the technical drawing may contain differences. Please note this product may have a visible printed FIENZA or Watermark logo. Due to printing limitations, physical colour may vary from the image shown. FIENZA reserves the right to make modifications without prior notice.