fienza

# POLAR SACCO STONE TOP - CURVED FULL DEPTH - 1800MM

| | |
|---|---|
| **Code** | 511-165-SF |
| **Colour** | Polar Sacco |
| **Material** | Silica Free Stone |
| **Install Type** | Topmounted |

## Details

- Silica free (defined as containing less than 1% crystalline silica)
- Non-porous surface with higher stain resistance than natural stone
- Resistant to heat chemicals moisture chips and cracks
- Hygienic easy to clean and maintain
- Suits Fienza curved vanities

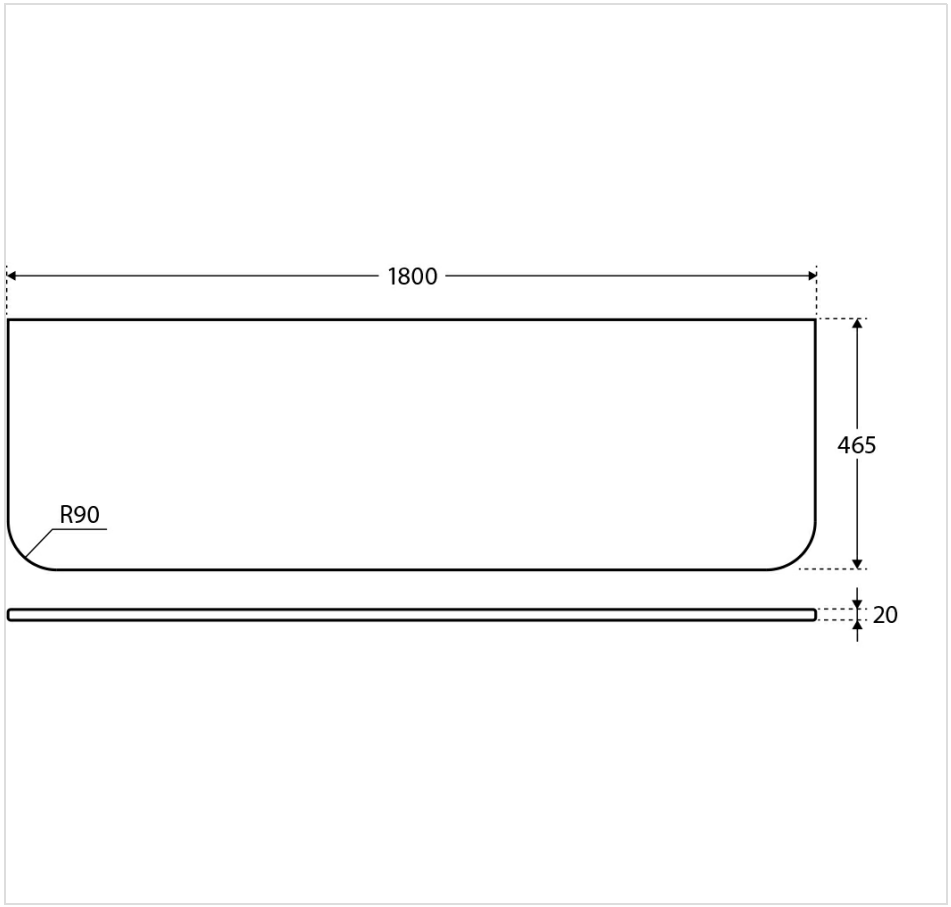




## Product/Installation Notes

N/A

## Specifications

| | |
|---|---|
| **Overall Size** | |
| **Weight** | |
| **Warranty** | Visit: **fienza.com.au/warranty** for more details |
| **WELS Registration** | N/A |
| **WELS Flow Rating** | N/A |

We aim to ensure that specifications are correct at the time of publication. All measurements are shown in millimetres. Always use measurements of actual product received for final specification as the technical drawing may contain differences. Please note this product may have a visible printed FIENZA or Watermark logo. Due to printing limitations, physical colour may vary from the image shown. FIENZA reserves the right to make modifications without prior notice.