fienza

EDGE 450 ENSUITE WALL-HUNG VANITY WITH OVERFLOW - SCANDI OAK

Code	45RS-OF
Colour	Scandi Oak
Material	Sustainably Sourced Timber
Install Type	Wall Hung

Details

- Reversible, gloss white poly-marble basin-top
- Chrome overflow ring included
- Reversible, soft-close door, for left-hand or right-hand opening
- Bevelled edge pull-channel (long edge of door)
- Matching interior and exterior finish
- 16 mm thick backing board
- Includes cabinet and basin-top

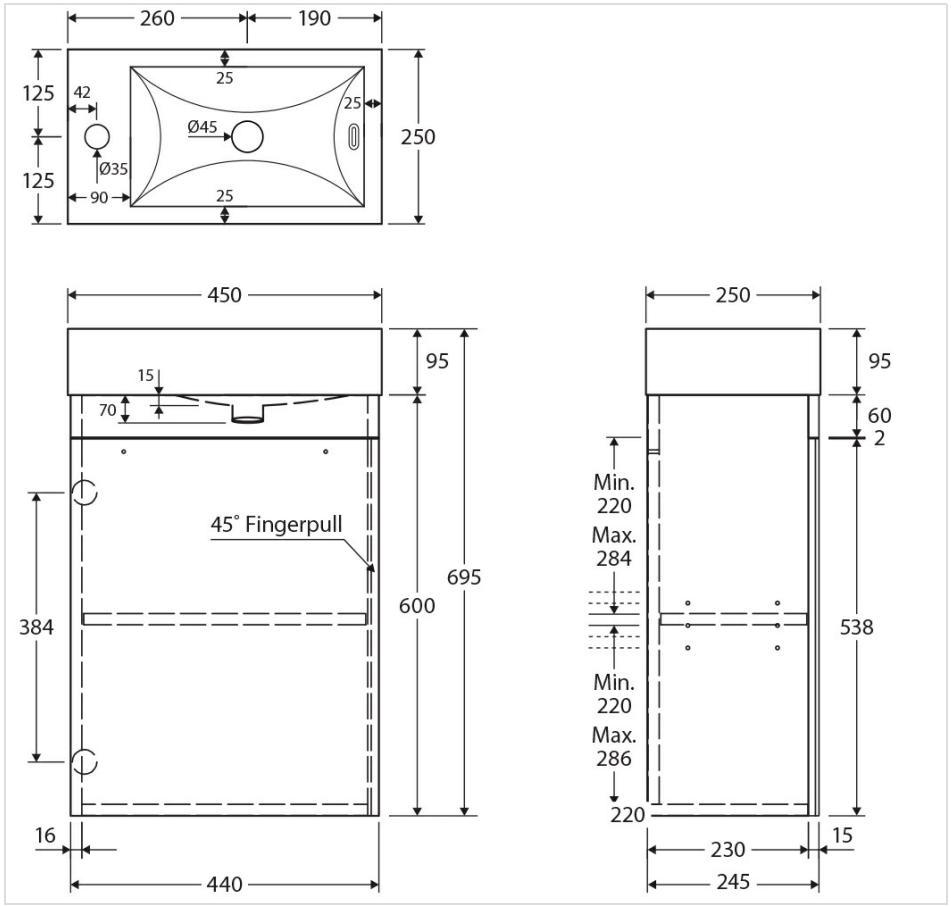



Product/Installation Notes

Includes cabinet and basin-top

Specifications

Overall Size	
Weight	
Warranty	Visit: **fienza.com.au/warranty** for more details
WELS Registration	N/A
WELS Flow Rating	N/A

We aim to ensure that specifications are correct at the time of publication. All measurements are shown in millimetres. Always use measurements of actual product received for final specification as the technical drawing may contain differences. Please note this product may have a visible printed FIENZA or Watermark logo. Due to printing limitations, physical colour may vary from the image shown. FIENZA reserves the right to make modifications without prior notice.