fienza

RALPH SLIM ENSUITE DEPTH POLY-MARBLE OVERFLOW BASIN TOP

Code	4525T-T2
Colour	Gloss White
Material	Poly-Marble
Install Type	Topmounted

Details

- Gloss white finish
- Designed for Riley & Edge cabinets only
- Reversible design for left or right tap position
- Made from poly-marble for a straight
- true finish
- One tap hole
- Built-in overflow
- Requires 32 mm overflow waste (available separately)
- Made from poly-marble

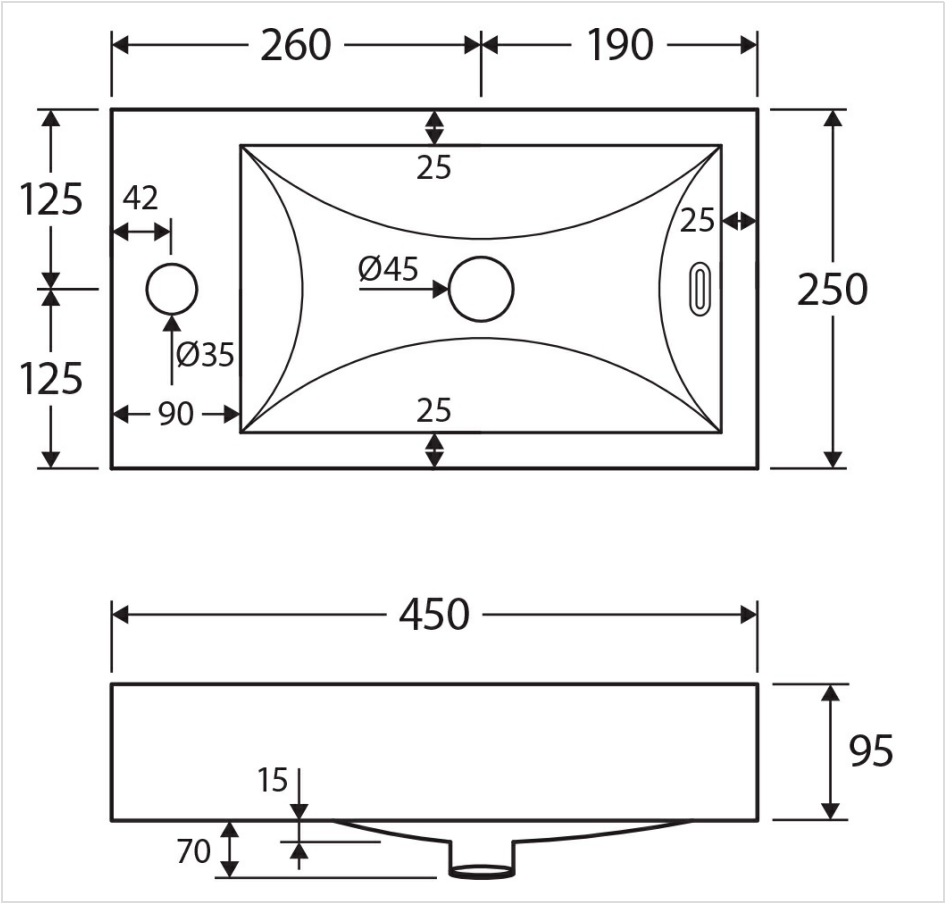



Product/Installation Notes

N/A

Specifications

Overall Size	450 mm (L) × 250 mm (W) × 180 mm (H)
Weight	8 kg
Warranty	Visit: **fienza.com.au/warranty** for more details
WELS Registration	N/A
WELS Flow Rating	N/A

We aim to ensure that specifications are correct at the time of publication. All measurements are shown in millimetres. Always use measurements of actual product received for final specification as the technical drawing may contain differences. Please note this product may have a visible printed FIENZA or Watermark logo. Due to printing limitations, physical colour may vary from the image shown. FIENZA reserves the right to make modifications without prior notice.