fienza

KOKO 420 ABOVE COUNTER BASIN WITH OVERFLOW

Code	RB184-OF
Colour	Gloss White
Material	Vitreous China
Install Type	Above Counter

Details

- Soft square, thin edge design
- Gloss white finish
- Vitreous china
- Glazed on the back side
- Built-in overflow
- Requires 32mm overflow waste (not included)
- Matching ceramic cap pop-up wastes also available

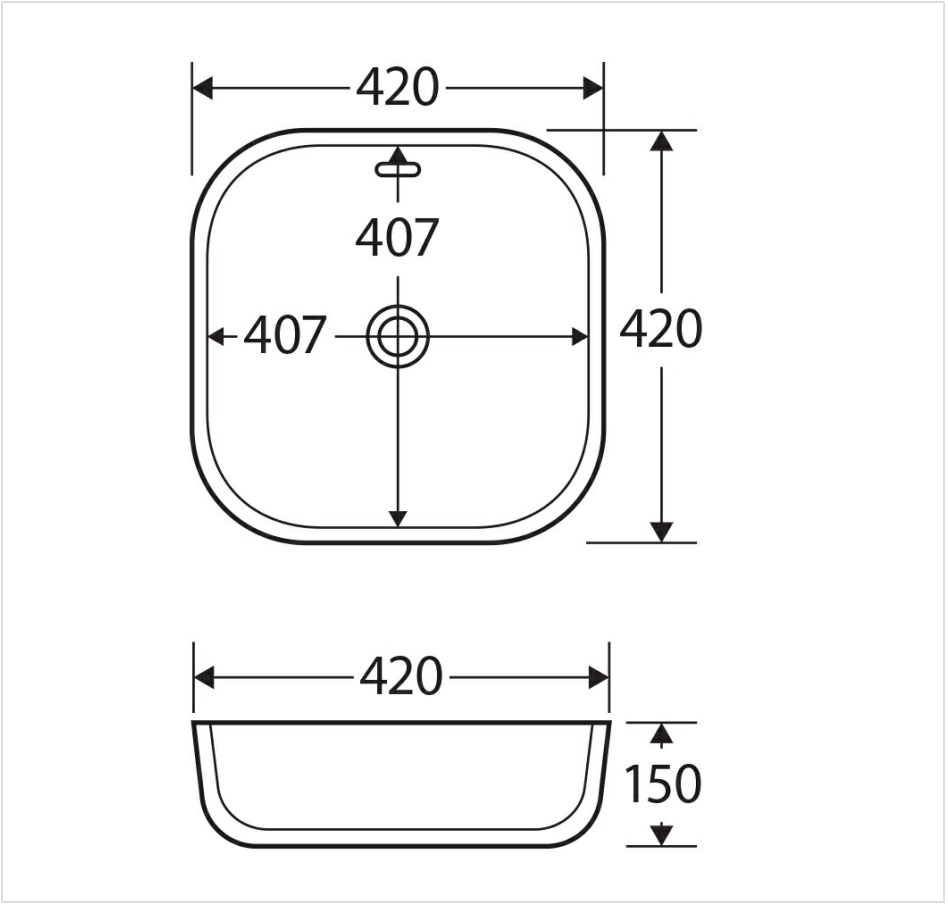



Product/Installation Notes

Requires waste - available separately.

Specifications

Overall Size	420 mm (L) × 420 mm (W) × 150 mm (H)
Weight	8.5 kg
Warranty	Visit: **fienza.com.au/warranty** for more details
WELS Registration	N/A
WELS Flow Rating	N/A

We aim to ensure that specifications are correct at the time of publication. All measurements are shown in millimetres. Always use measurements of actual product received for final specification as the technical drawing may contain differences. Please note this product may have a visible printed FIENZA or Watermark logo. Due to printing limitations, physical colour may vary from the image shown. FIENZA reserves the right to make modifications without prior notice.