fienza

BIANCO MARBLE STONE TOP - CURVED FULL DEPTH - 1800MM

Code	504-165-SF
Colour	Bianco Marble
Material	Silica Free Stone
Install Type	Topmounted

Details

- Silica free (defined as containing less than 1% crystalline silica)
- Non-porous surface with higher stain resistance than natural stone
- Resistant to heat chemicals moisture chips and cracks
- Hygienic easy to clean and maintain
- Suits Fienza curved vanities

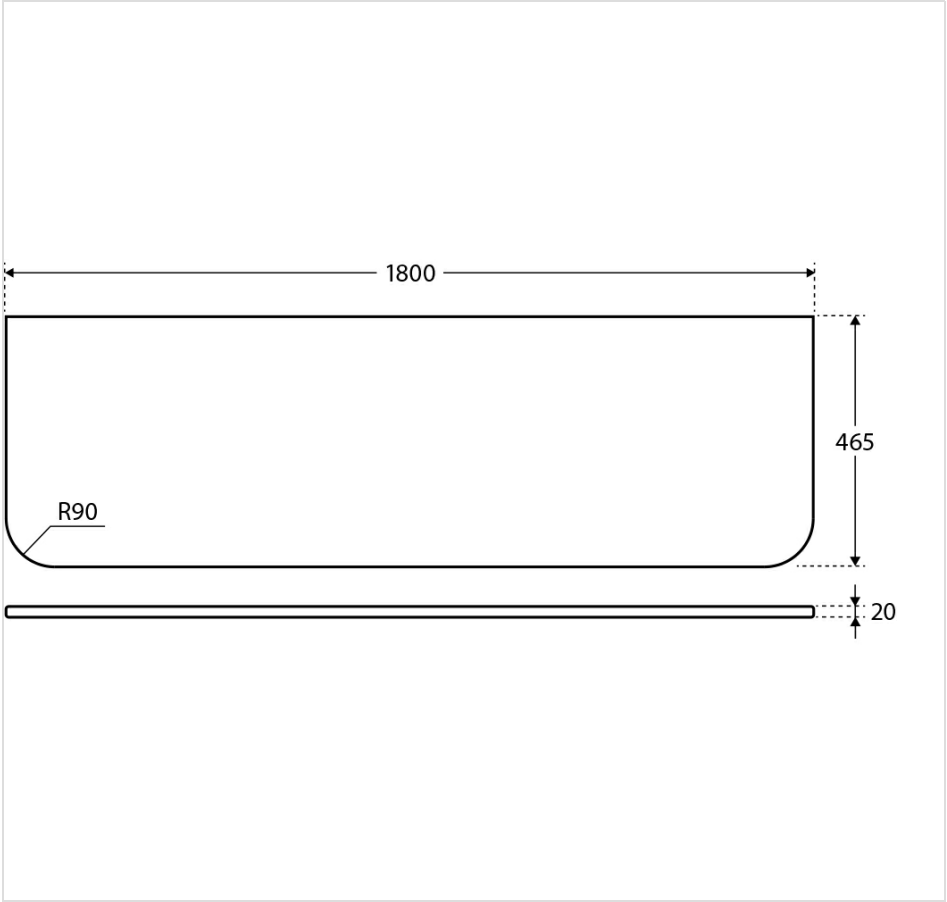

Product/Installation Notes

N/A

Specifications

Overall Size	
Weight	
Warranty	Visit: **fienza.com.au/warranty** for more details
WELS Registration	N/A
WELS Flow Rating	N/A

We aim to ensure that specifications are correct at the time of publication. All measurements are shown in millimetres. Always use measurements of actual product received for final specification as the technical drawing may contain differences. Please note this product may have a visible printed FIENZA or Watermark logo. Due to printing limitations, physical colour may vary from the image shown. FIENZA reserves the right to make modifications without prior notice.