Satori

FULL DEPTH CONCRETE BASIN-TOP 1200MM

Features

- Concrete with food-grade nano coating
- Unique warm grey or vanilla finish
- Reversible for left or right facing bowl
- No tap hole design
- Requires 32 mm non-overflow waste (available separately: WAS72)



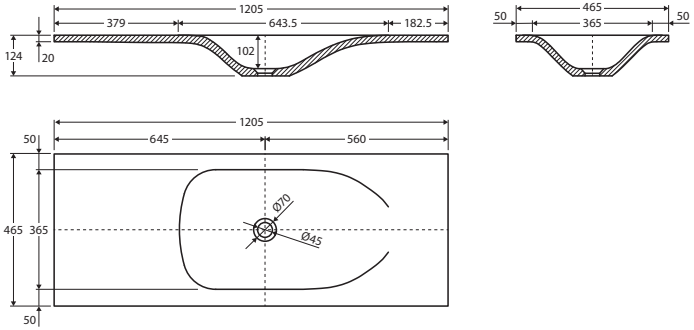



Available in

Warm Grey
SAT120

Vanilla
SATV120

Cleaning & Care

- Wipe with a clean, soft microfibre cloth and mild soapy water or non-abrasive bathroom cleaner. Test in an inconspicuous area before cleaning the whole top.
- Please do not use abrasive scour pads, as it can scratch the surface and break down the sealer.
- Avoid exposure to harsh products such as bleach, acetone, or nail polish remover. If exposure occurs, rinse immediately with water to neutralise the effect, and then follow usual cleaning procedure.
- Direct sunlight can cause concrete to slowly discolour over a long period.
- Avoid impact on edges and the surface with hard objects. With daily use, your concrete product may develop scratches, marks, and chipping over time.
- For full cleaning and care details, view the Concrete Care Guide on our website.

We aim to ensure that specifications are correct at the time of publication. All measurements are shown in millimetres. Always use measurements of actual product received for final specification as the technical drawing may contain differences.
Due to printing limitations, physical colour may vary from the image shown. Fienza reserves the right to make modifications without prior notice. Tapware not included.