fienza

VANESSA FINGERPULL SATIN BLACK 1200 FLOOR STANDING VANITY

Code	VAN120ZBK
Colour	Satin Black
Material	Sustainably sourced timber
Install Type	Floor Standing

Details

Vanessa Moulded Basin Top:

- Gloss warm white finish
- 20mm thick poly-marble
- 3mm tile lip
- Modern rectangular bowl design
- No overflow
- 12 o'clock tap hole as standard (also available with 3 tap holes at additional cost)
- Requires 32mm non-overflow waste (available separately)

Fingerpull Wall Hung Cabinet:

- Satin black exterior (2pac; 70% matte, 30% gloss)
- Bright white interior
- Soft close doors and drawers
- Full extension drawer runners
- Solid 16mm backing board and drawer bases
- FSC approved, eco-friendly E0 quality board

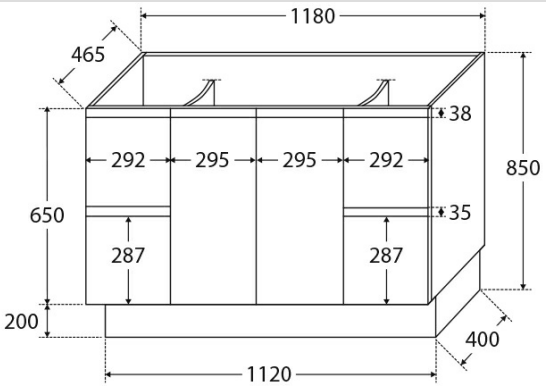

TOP VIEW: SHELF AREA & DRAWER AREA

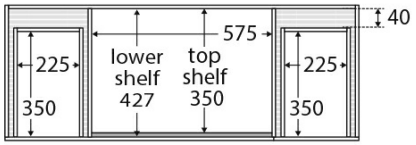

SIDE VIEW: SHELF STORAGE

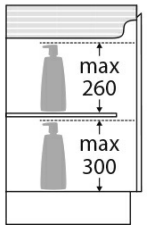

SIDE VIEW: RECESS & DRAWER STORAGE

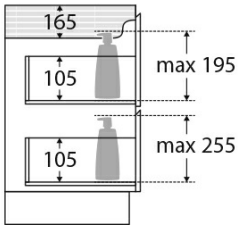



Product/Installation Notes

Please note that customers are responsible for verifying all specifications and measurements of product selections are compatible before ordering, including cabinetry, vanity tops, basins, custom basin positions, tap holes, plumbing, wastes, and related fittings.

Specifications

Overall Size	1200 mm (L) × 460 mm (W) × 580 mm (H)
Weight	
Warranty	Visit: **fienza.com.au/warranty** for more details
WELS Registration	N/A
WELS Flow Rating	N/A

We aim to ensure that specifications are correct at the time of publication. All measurements are shown in millimetres. Always use measurements of actual product received for final specification as the technical drawing may contain differences. Please note this product may have a visible printed FIENZA or Watermark logo. Due to printing limitations, physical colour may vary from the image shown. FIENZA reserves the right to make modifications without prior notice.