Universal

CURVED TWIN SHOWER

455300

Rail:

- Integrated top water inlet and diverter
- Slider to adjust height and angle of hand shower
- Made from solid brass
- 1.5 metre stainless steel hose (PVC on matte black model)

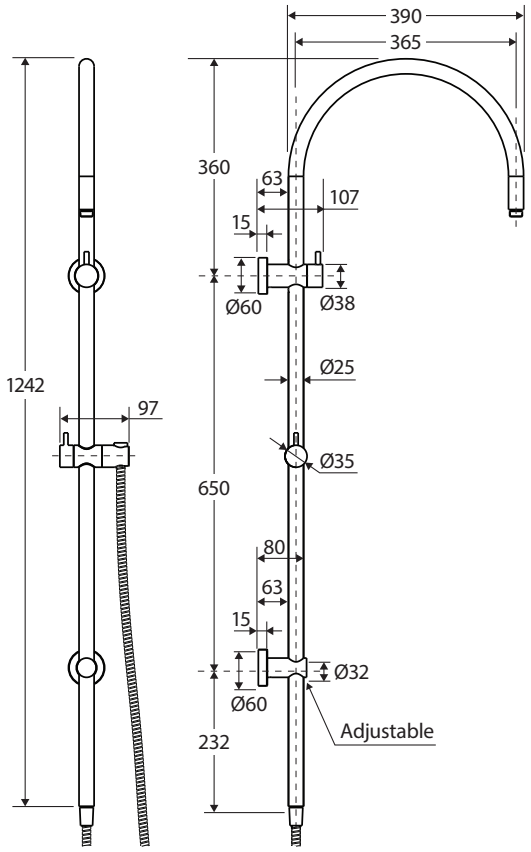

IMPORTANT: Please read all of the instructions before installation. Check the product thoroughly for damage. Installation is acceptance of goods supplied and will void warranty. This product is pre-assembled. Do not disassemble, as this may void the warranty.

Specifications

Please refer to **fienza.com.au** for the latest product specifications before installing.

Operating Pressure	Min: 150kPa/1.5bar Max: 500kPa/5.0bar Optimum: 150kPa/1.5bar - 500kPa/5bar Installation of pressure limiting valve recommended if supply exceeds 500kPa
Operating Temperature	Hot: Max 80°C Cold: Min. 5°C
Inlet Connections	1/2" BSPP
Suitable Hot Water Units	Storage tank and continuous flow only. Not suitable for gravity feed.

General Information

- This product must be installed by a qualified licensed plumber in accordance with AS/NZS 3500 and all applicable local regulations and plumbing codes.
- All pipe work must be thoroughly flushed prior to installation.
- Do not remove the ceramic cartridge from the mixer when installing.
- After installation all hoses and connections must be checked for leaks.
- It is the responsibility of the installer to ensure a waterproof seal is achieved between the product and mounting surface.

Installation

IMPORTANT:

- Before commencing installation, turn off the water supply. While not essential, we recommend fitting isolation valves to both the hot and cold-water supply.
- Some shower heads only operate correctly when hot and cold water supplies are both mains pressure and may not be suitable for some instantaneous hot water services.
- When water pressure is in excess of 500kPa a pressure limiting device is required.
- Some showers may not provide an effective shower when used with gravity fed heated water systems or where pressures are less than 150kPa at the outlet. Additionally, showers with flow rates of less than 9L/min may not allow the following to function correctly:
  - Some instantaneous water heaters
  - Some tempering valves
  - Some thermostatic mixing valves

1. Install a ½" male threaded connection at the recommended height on wall, ensuring that a minimum of 13±2mm of thread protrudes past the finished wall. Correct water proofing must be applied.

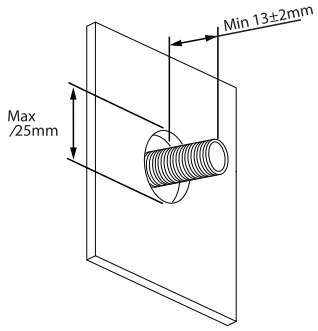

Water inlet: recommended minimum height of 1800mm from floor level.

2. Apply thread tape (or similar) to the ½" connection, then screw the top rail connector to the connection.

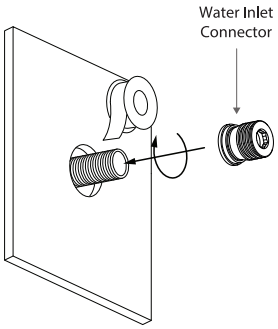

3. Screw the bottom rail connector to a wall stud making sure it is vertically in line with the top rail connector. Maximum centre distance between the top and bottom shower connections is 650mm.

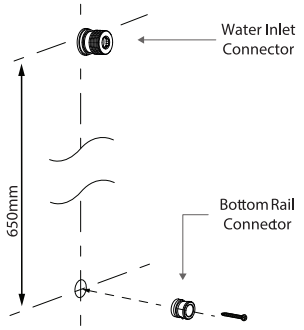

4. Check the grub screws are wound straight. Push the rail brackets onto the top and bottom rail connectors until they are against wall. Secure with grub screws.

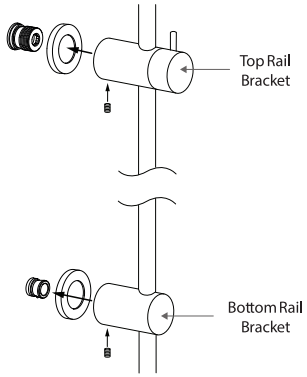

5. Remove the protective cap from the showerhead ball joint and screw the unit onto the overhead arm ensuring the filter washer is in place.
This arm is not adjustable.

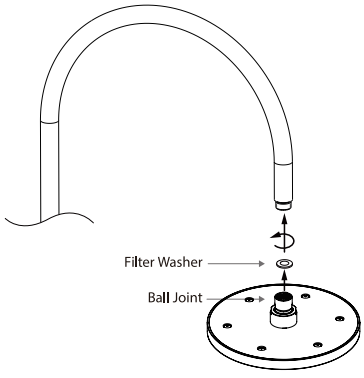

6. Make sure a washer is in both ends of the hose. Screw hose onto lower outlet on rail, attach handset and place firmly in holder. Tilt and rotate head to the desired position.

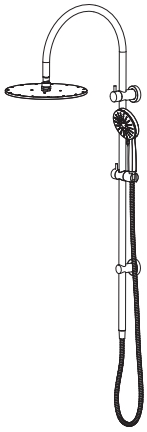

1	Rail
2	Arm
3	Fixing body parts
4	90° Diverter Cartridge
5	Diverter Body
6	Slider
7	Flange
8	Flange
9	Fixing Base
10	Fixing Base
11	Connector
12	Handle
13	Round handle Rod
14	Connector
15	Ø16 x 2 mm O Ring
16	Ø29 x 2 mm O Ring
17	Ø42 x 2 mm O Ring
18	Screw
19	Screw
20	Screw
21	POM Ring
22	1.5 m SS Hose

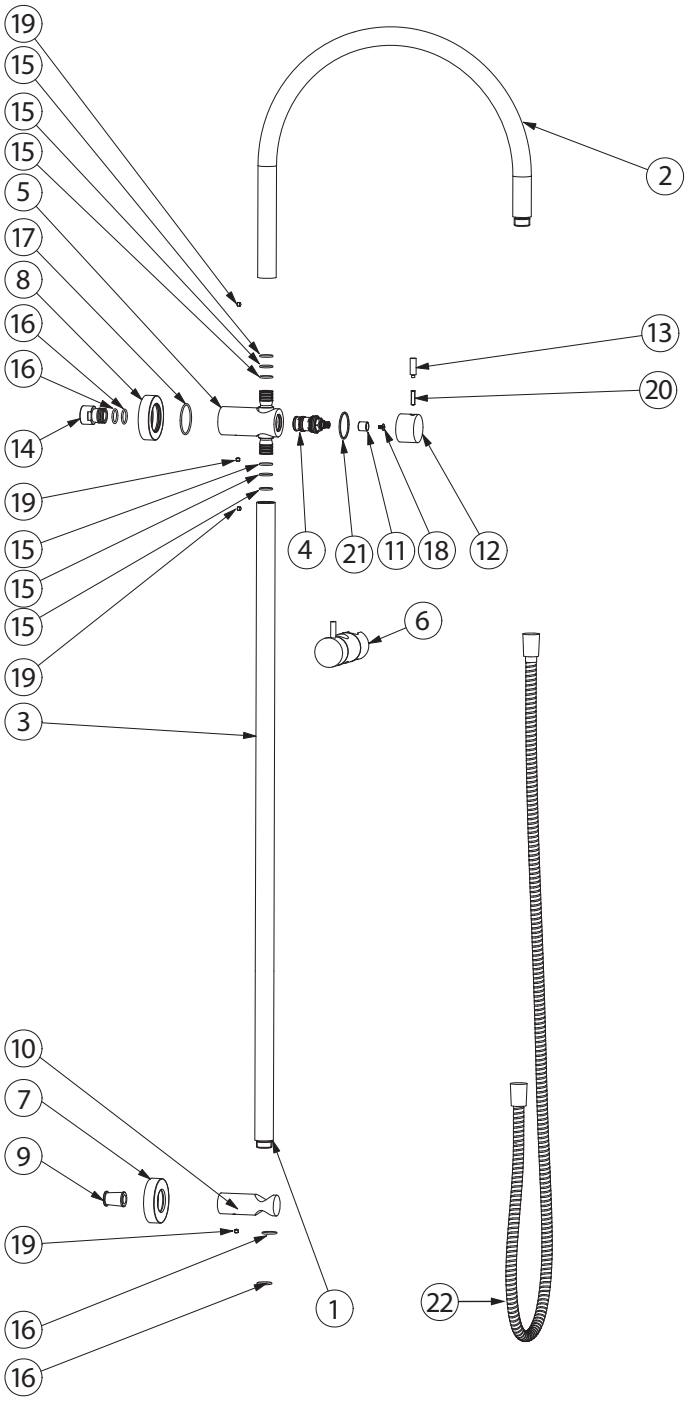

Cleaning & Care

We recommend weekly cleaning with mild soapy water and a microfibre cloth. In highly polluted or coastal locations we recommend cleaning 2-3 times per week. Please note that colour tapware requires more frequent cleaning than chrome tapware.

- Never use harsh detergents, citrus-based cleaners or abrasive cleaners, as these will scratch the surface. Use of unsuitable cleaners may damage the surface and will not be covered by warranty.
- Where your tapware remains dry in use, a non-abrasive soft cloth can be used to remove surface dust.
- Use of wax-based furniture creams should be avoided as these can result in a build-up of deposits which can effect the appearance.
- Do not use undue pressure and wipe in one direction only.

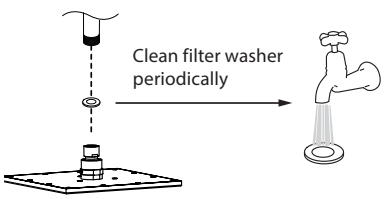

Warranties

Residential Warranty Periods

Applies to domestic uses and applications of Fienza® products, such as private dwellings and retirement villages.

Commercial Warranty Periods

Applies to commercial uses and applications of Fienza® products, including, but not limited to: commercial food premises such as restaurants; commercial accommodation such as hotels; hospitals and healthcare facilities; public amenities; and industrial, laboratory and manufacturing facilities.

Product Component	Residential	Commercial
Rails (Structure Only)	LIFETIME replacement parts or product, 1 year labour on Twin Showers	5 years replacement parts or product, 1 year labour on Twin Shower Rails
Flexible Hoses	1 year replacement parts or product	1 year replacement parts or product
Finishes - Chrome	LIFETIME replacement parts or product	5 years replacement parts or product
Finishes - PVD & Electroplated	5 years replacement parts or product	1 year replacement parts or product
Accessories & Spare Parts	1 year replacement parts or product	1 year replacement parts or product

*Excludes parts subject to general wear and tear such as O-rings, washers and jumper valves. Labour is not included unless otherwise specified.

Australian Consumer Law

Our products come with guarantees that cannot be excluded under the Australian Consumer Law. You are entitled to a replacement or refund for a major failure upon inspection by an authorised representative where a product is found to be defective in construction, material or assembly. You are also entitled to have the goods repaired or replaced if the goods fail to be of acceptable quality and the failure does not amount to a major failure, free of charge.

Warranty Conditions

- Installation has been carried out by a licensed plumber in accordance with AS/NZS 3500 and all applicable local regulations and plumbing codes.
- All maintenance and adjustments to the product after the installation have been carried out by a licensed plumber.
- Cleaning and care instructions detailed in this document have been strictly adhered to.
- Proof of purchase is required for warranty claims.

Warranty Limitations

To the extent permitted under the Trade Practices Act and other relevant legislation, Fienza's liability is limited to:

- The cost of replacing the goods, or
- The cost of obtaining equivalent goods, or
- The cost of having the goods repaired
- Fienza is not responsible for any lack of operation or performance of goods (or any loss or damage) where goods are used or adapted for use with other goods not supplied by Fienza.
- It is the responsibility of the customer and installer before installation to ensure that all components are correct and free of obvious visible faults.
- Fienza is not responsible for the labour and rectification costs incurred in the above circumstance.

Conditions for On-Site Warranty Service Calls

Fienza will charge a service fee for each visit to an installation by its technician where it is determined that the fault is due to poorly executed or unlicensed installation work or where the product is not a genuine Fienza product or where the product is outside the warranty period. This may be paid in advance by credit card over the phone to a Fienza technician attending the site and will be refunded if the Fienza product is found to be at fault.

PLEASE LEAVE THIS MANUAL WITH THE END USER

For warranty support, please contact Fienza
15 Walter Cres, Lawnton QLD 4501 PO Box 5381, Brendale QLD 4500
P 07 3490 6700 **F** 07 3490 6719 **E** help@fienza.com.au ABN 76 136 411 311

fienza®