fienza

UNIVERSAL POP-UP / PULL-OUT BASIN WASTE - URBAN BRASS

Code	WAS72UB
Colour	Urban Brass
Material	Brass
Install Type	Basin

Details

- Designed for use with basins only
- Entire top section pulls out for easy cleaning and draining
- PVD urban brass finish
- Brass dome cap
- Convertible for use with or without an overflow (overflow adjusted by centre screw)
- Suits 32 mm or 40 mm outlet (40 mm requires use of included adaptor)

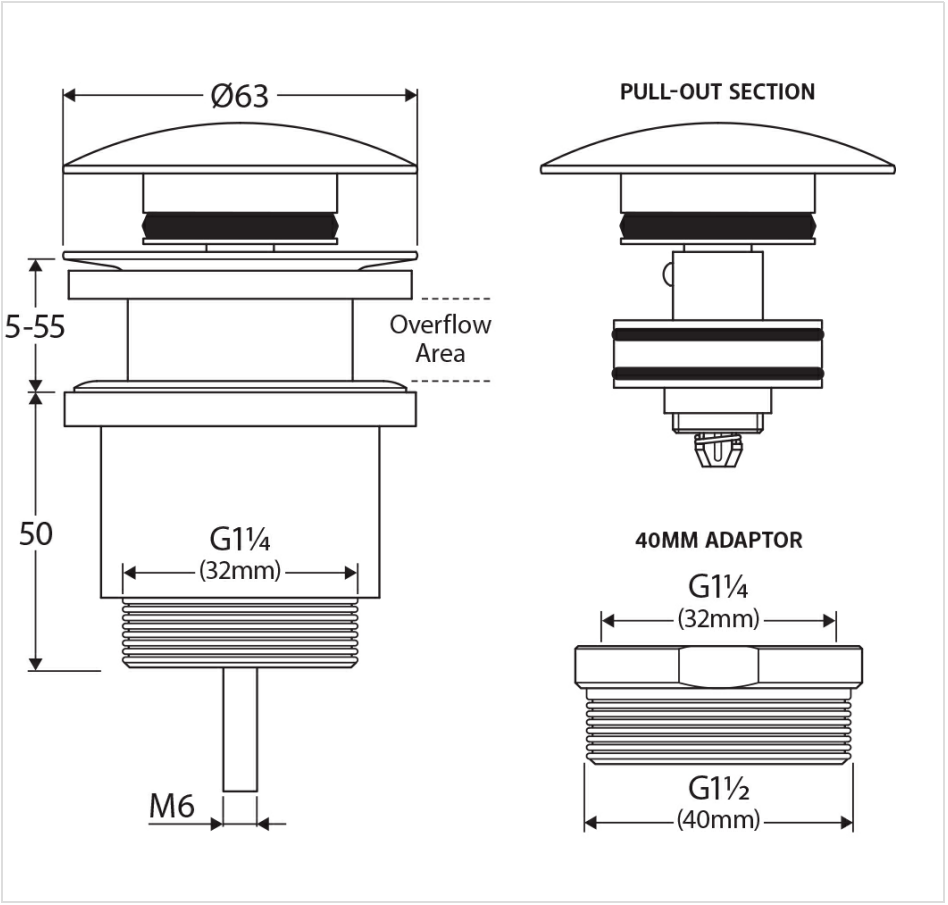



Specifications

Overall Size	63 mm (L) × 63 mm (W) × 105 mm (H)
Weight	0.8 kg
Warranty	Visit: **fienza.com.au/warranty** for more details
WELS Registration	N/A
WELS Flow Rating	N/A

We aim to ensure that specifications are correct at the time of publication. All measurements are shown in millimetres. Always use measurements of actual product received for final specification as the technical drawing may contain differences. Please note this product may have a visible printed FIENZA or Watermark logo. Due to printing limitations, physical colour may vary from the image shown. FIENZA reserves the right to make modifications without prior notice.