fienza

SQUARE TILE 2-IN-1 FLOOR WASTE - 88MM OUTLET - BRUSHED COPPER

Code	TIW85DCO
Colour	Brushed Copper
Material	Brass
Install Type	Floor Mounted

Details

This reversible 2-in-1 floor waste allows greater design flexibility with the option of using the included traditional waste cover, or the tile bed insert to provide a seamless look with your chosen floor tiles.

- Made from solid brass
- Electroplated brushed copper finish
- 88 mm outlet

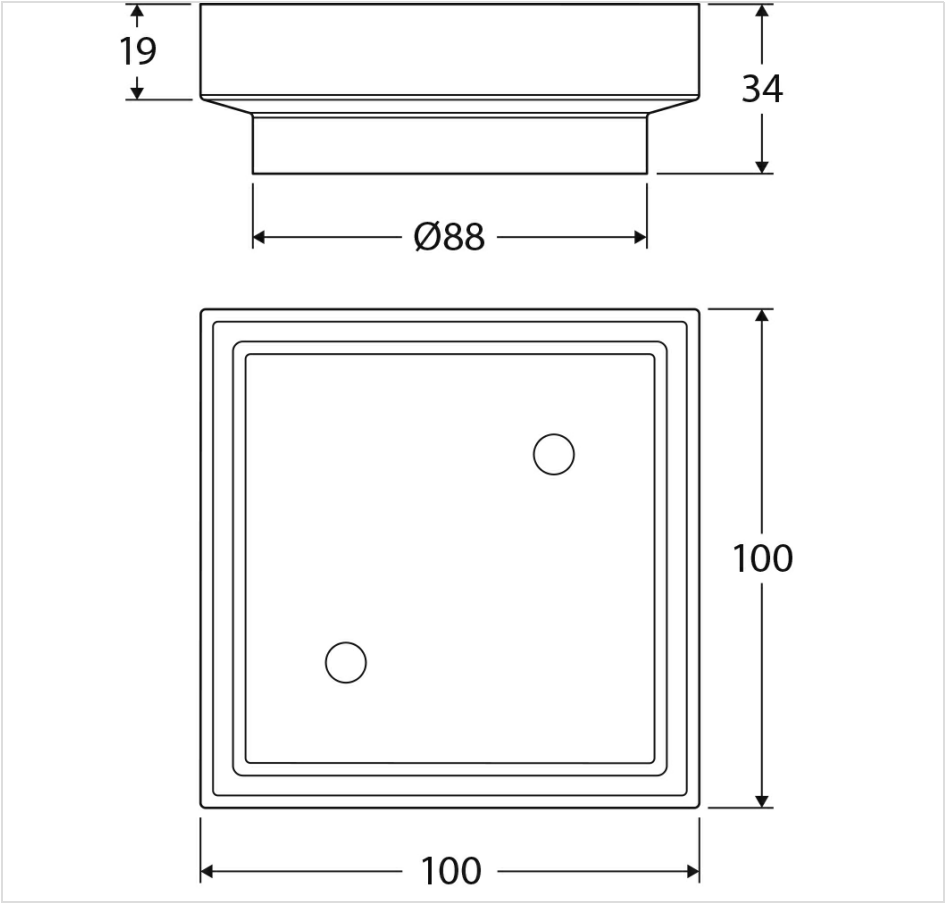



Specifications

Overall Size	100 mm (L) × 30 mm (W) × 100 mm (H)
Weight	0.5 kg
Warranty	Visit: **fienza.com.au/warranty** for more details
WELS Registration	
WELS Flow Rating	N/A

We aim to ensure that specifications are correct at the time of publication. All measurements are shown in millimetres. Always use measurements of actual product received for final specification as the technical drawing may contain differences. Please note this product may have a visible printed FIENZA or Watermark logo. Due to printing limitations, physical colour may vary from the image shown. FIENZA reserves the right to make modifications without prior notice.