fienza

HAMPTON SOLID SURFACE BATH

Code	ST17
Colour	Matte White
Material	Solid Surface
Install Type	Freestanding

Details

- Matte white finish
- Freestanding style with legs
- Easy to clean
- Solid surface
- Built-in overflow
- Chrome cap pop-up/pull-out overflow waste included

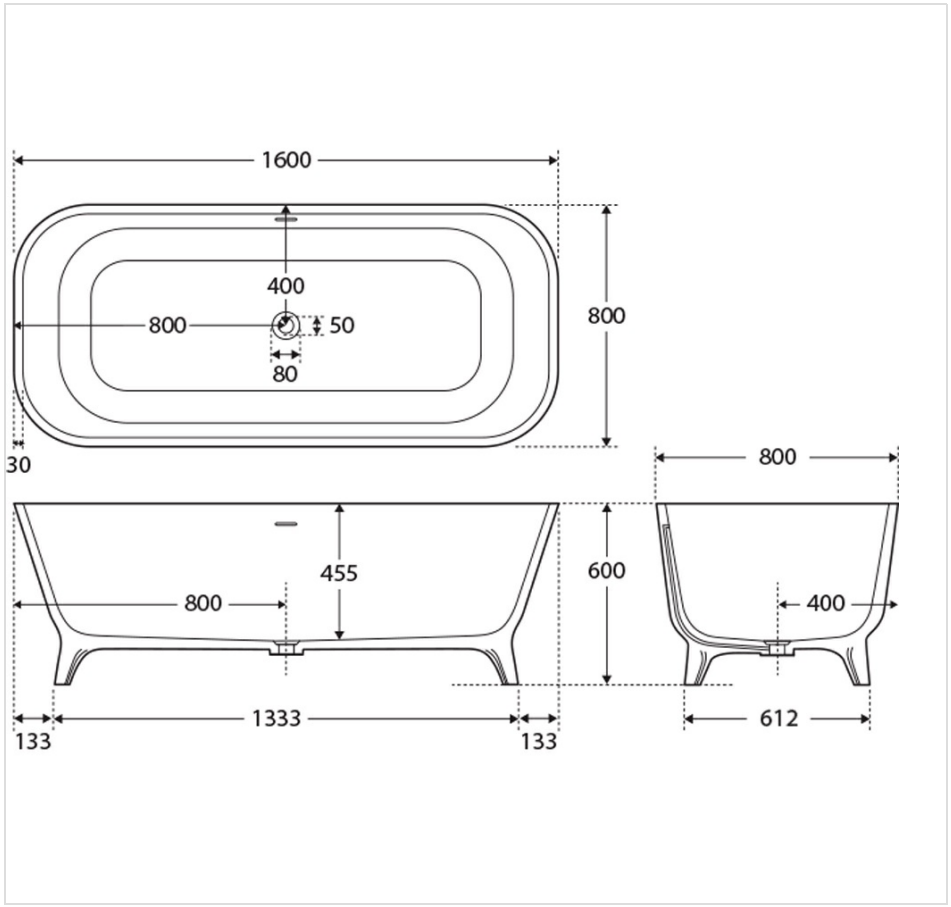



Product/Installation Notes

Installation Warning - Floor preparation may be required for off-centre waste positions. Please discuss with your builder/plumber before tiling and waterproofing your bathroom.

Specifications

Overall Size	1600 mm (L) × 800 mm (W) × 600 mm (H)
Weight	125 kg
Warranty	Visit: **fienza.com.au/warranty** for more details
WELS Registration	N/A
WELS Flow Rating	N/A

We aim to ensure that specifications are correct at the time of publication. All measurements are shown in millimetres. Always use measurements of actual product received for final specification as the technical drawing may contain differences. Please note this product may have a visible printed FIENZA or Watermark logo. Due to printing limitations, physical colour may vary from the image shown. FIENZA reserves the right to make modifications without prior notice.