fienza

KAYA GOOSENECK FLOOR MOUNTED BATH SPOUT - MATTE WHITE

Code	SP8016MW
Colour	Matte White
Material	Brass
Install Type	Floor Mounted

Details

- Electroplated matte white finish
- Floor mounted, fixed position
- Fitted with aerator
- Made from solid brass
- Push-fit installation

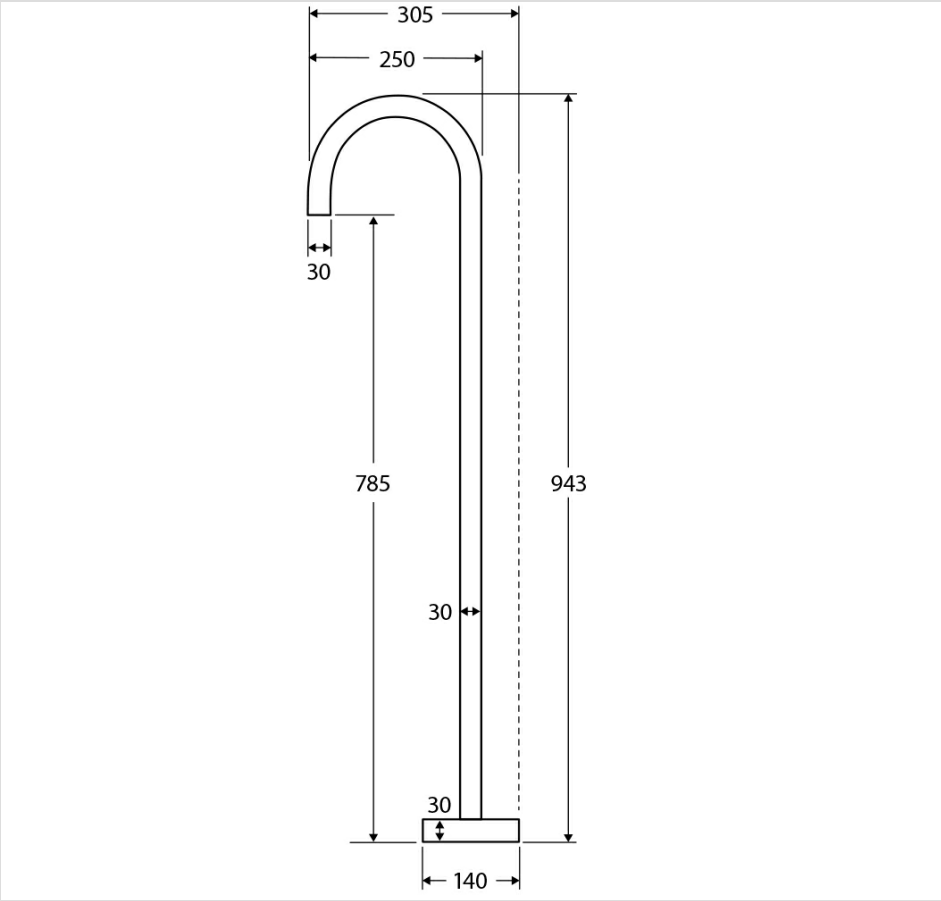

Specifications

Overall Size	305 mm (L) × 140 mm (W) × 943 mm (H)
Weight	2.7 kg
Warranty	Visit: **fienza.com.au/warranty** for more details
WELS Registration	N/A
WELS Flow Rating	N/A

Product/Installation Notes

Please note this product may have a visible printed Fienza or Watermark logo.

We aim to ensure that specifications are correct at the time of publication. All measurements are shown in millimetres. Always use measurements of actual product received for final specification as the technical drawing may contain differences. Please note this product may have a visible printed FIENZA or Watermark logo. Due to printing limitations, physical colour may vary from the image shown. FIENZA reserves the right to make modifications without prior notice.