fienza

RAK-VALET OVAL ABOVE COUNTER BASIN - ALPINE GLOSS WHITE

Code	RKB640
Colour	Gloss White
Material	Vitreous China
Install Type	Above Counter

Details

- Alpine gloss white finish
- Slim edge
- Vitreous china
- No tap hole or overflow
- Integrated shelf and rasied to help keep the basin/vanity top clean
- Requires 32 mm non-overflow waste (not included; only compatible with WAS72 metal cap wastes)

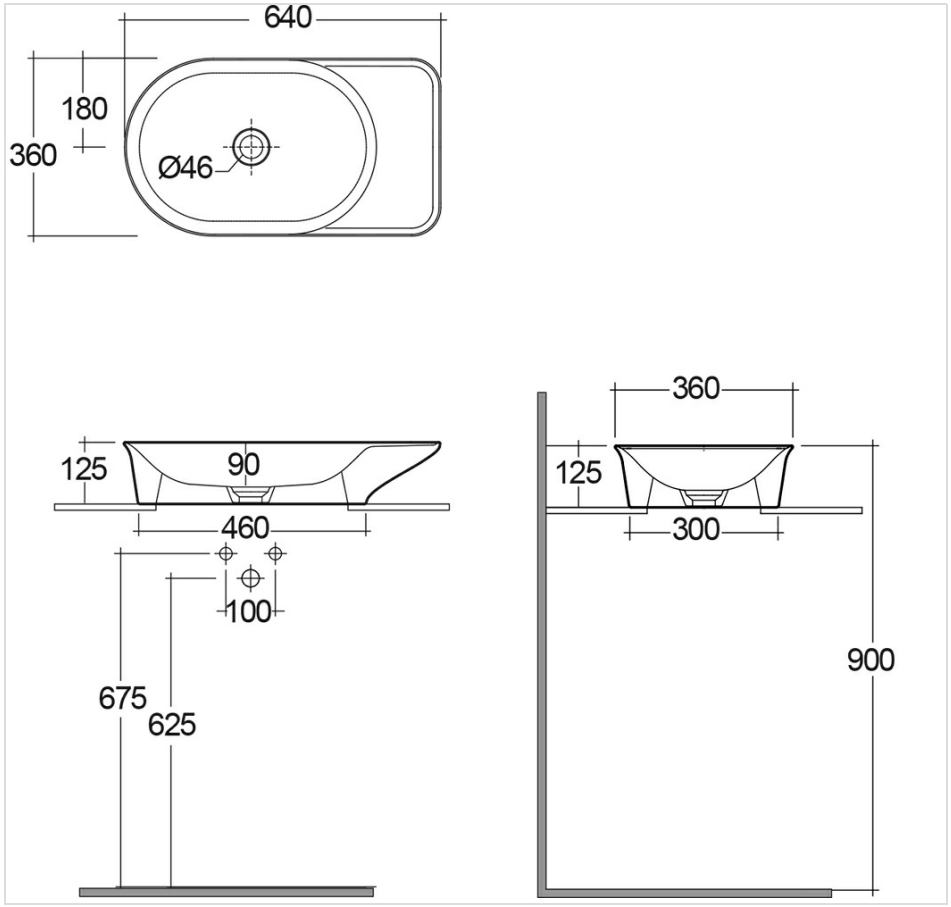



Specifications

Overall Size	640 mm (L) × 360 mm (W) × 125 mm (H)
Weight	12 kg
Warranty	Visit: **fienza.com.au/warranty** for more details
WELS Registration	N/A
WELS Flow Rating	N/A

Product/Installation Notes

Requires waste - available separately.

We aim to ensure that specifications are correct at the time of publication. All measurements are shown in millimetres. Always use measurements of actual product received for final specification as the technical drawing may contain differences. Please note this product may have a visible printed FIENZA or Watermark logo. Due to printing limitations, physical colour may vary from the image shown. FIENZA reserves the right to make modifications without prior notice.