fienza

ALUCA ABOVE COUNTER BASIN - GLOSS WHITE

Code	RB821
Colour	Gloss White
Material	Vitreous China
Install Type	Above Counter

Details

- Gloss white finish
- 5 mm slim edge design
- Vitreous china
- No tap hole or overflow
- Requires 32 mm non-overflow waste (not included)
- Matching ceramic cap pop-up wastes available

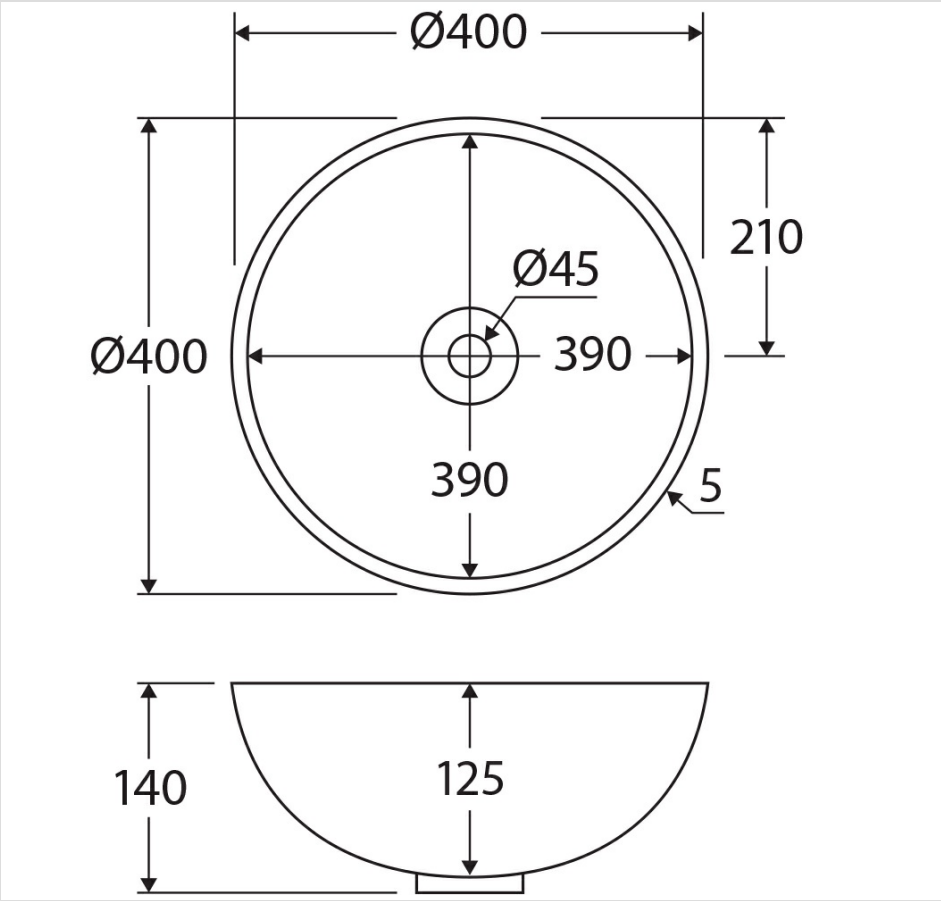



Product/Installation Notes

When used with a Fienza vanity top, only 10 o'clock or 2 o'clock tap hole cut positions are available.

Specifications

Overall Size	400 mm (L) × 400 mm (W) × 140 mm (H)
Weight	6 kg
Warranty	Visit: **fienza.com.au/warranty** for more details
WELS Registration	N/A
WELS Flow Rating	N/A

We aim to ensure that specifications are correct at the time of publication. All measurements are shown in millimetres. Always use measurements of actual product received for final specification as the technical drawing may contain differences. Please note this product may have a visible printed FIENZA or Watermark logo. Due to printing limitations, physical colour may vary from the image shown. FIENZA reserves the right to make modifications without prior notice.