fienza

ELEANOR FLUTED ARCH ABOVE COUNTER BASIN - GLOSS WHITE

Code	RB463
Colour	Gloss White
Material	Vitreous China
Install Type	Above Counter

Details

- Fluted design
- Gloss white finish
- Vitreous china
- No tap hole or overflow
- Requires 32mm waste without overflow (not included)

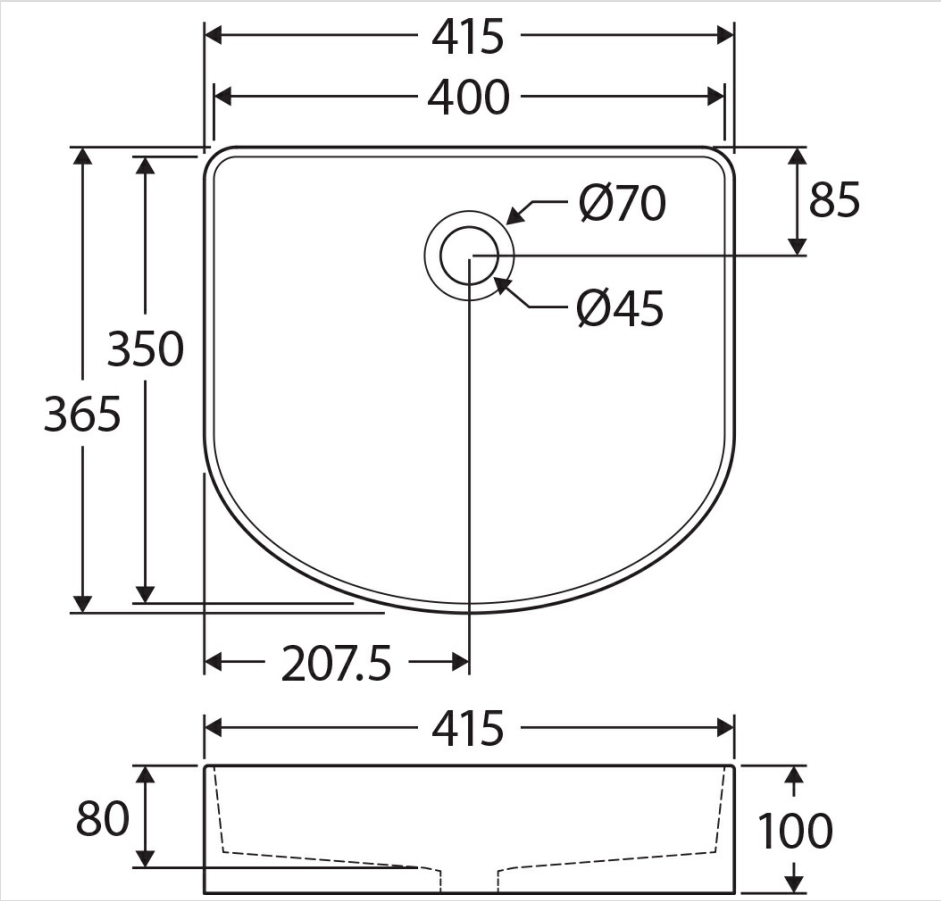



Product/Installation Notes

Requires waste - available separately.

Specifications

Overall Size	415 mm (L) × 365 mm (W) × 100 mm (H)
Weight	10 kg
Warranty	Visit: **fienza.com.au/warranty** for more details
WELS Registration	N/A
WELS Flow Rating	N/A

We aim to ensure that specifications are correct at the time of publication. All measurements are shown in millimetres. Always use measurements of actual product received for final specification as the technical drawing may contain differences. Please note this product may have a visible printed FIENZA or Watermark logo. Due to printing limitations, physical colour may vary from the image shown. FIENZA reserves the right to make modifications without prior notice.