fienza

JADA ROUND CONCRETE ABOVE COUNTER BASIN - WARM GREY

Code	RB199
Colour	Warm Grey
Material	Concrete
Install Type	Above Counter

Details

- Unique visual appeal with variations in colour, texture, and small surface details like pinholes or bubbles
- Warm grey finish
- Concrete with food-grade nano sealant
- No overflow
- Requires 32 mm non-overflow waste (not included)

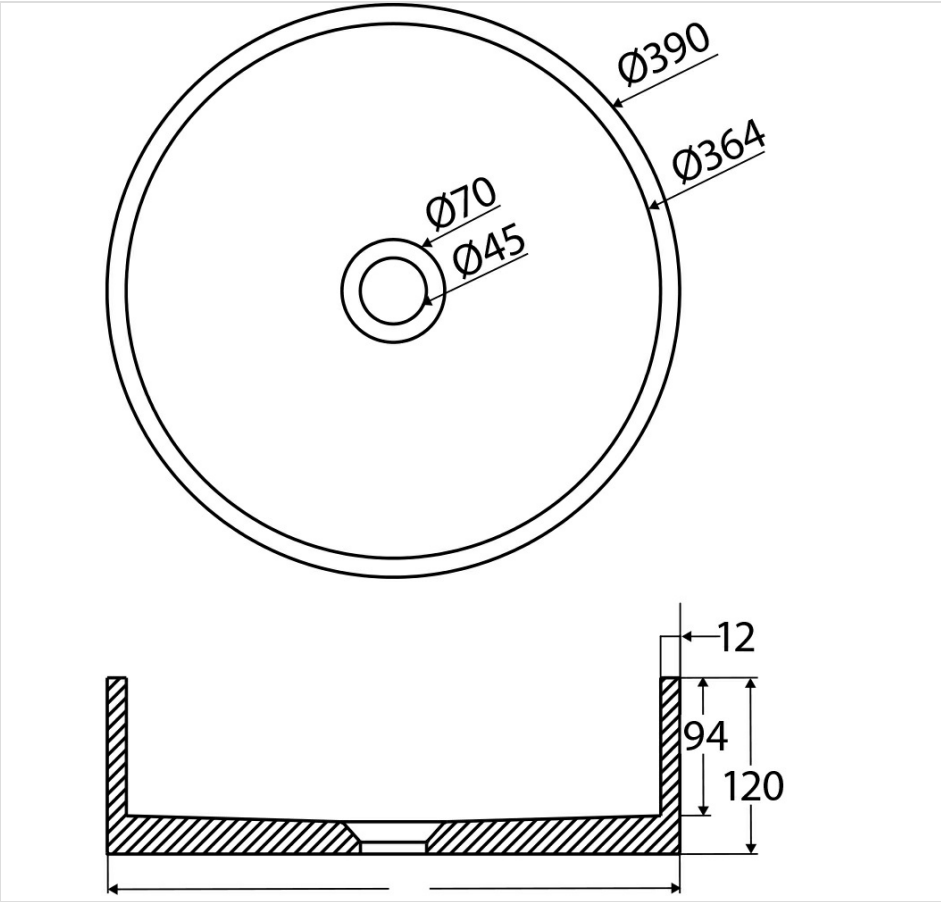



Specifications

Overall Size	390 mm (L) × 390 mm (W) × 120 mm (H)
Weight	9 kg
Warranty	Visit: **fienza.com.au/warranty** for more details
WELS Registration	N/A
WELS Flow Rating	N/A

Product/Installation Notes

When installed with a Fienza vanity top, 12 o'clock tap hole positions cannot be used.

We aim to ensure that specifications are correct at the time of publication. All measurements are shown in millimetres. Always use measurements of actual product received for final specification as the technical drawing may contain differences. Please note this product may have a visible printed FIENZA or Watermark logo. Due to printing limitations, physical colour may vary from the image shown. FIENZA reserves the right to make modifications without prior notice.