fienza

VALENTINA FLUTED ARCH CONCRETE WALL BASIN - WARM WHITE

Code	RB078W
Colour	Warm White
Material	Concrete
Install Type	Wall Hung

Details

- Unique visual appeal with variations in colour, texture, and small surface details like pinholes or bubbles
- Warm white finish
- Fluted design
- Concrete with food-grade nano sealant
- No overflow
- Requires 32 mm non-overflow waste (not included)
- Extra heavy duty mounting brackets and bolts included

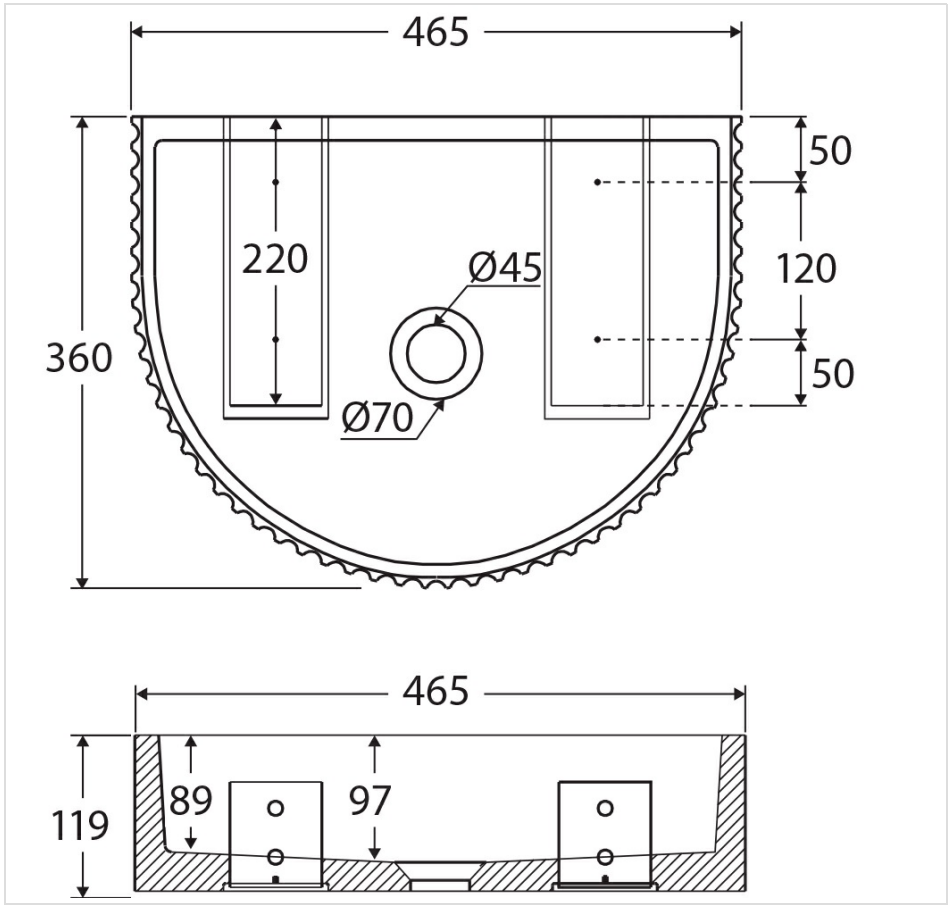



Specifications

Overall Size	465 mm (L) × 360 mm (W) × 119 mm (H)
Weight	14.95 kg
Warranty	Visit: **fienza.com.au/warranty** for more details
WELS Registration	N/A
WELS Flow Rating	N/A

Product/Installation Notes

Requires waste - available separately.

We aim to ensure that specifications are correct at the time of publication. All measurements are shown in millimetres. Always use measurements of actual product received for final specification as the technical drawing may contain differences. Please note this product may have a visible printed FIENZA or Watermark logo. Due to printing limitations, physical colour may vary from the image shown. FIENZA reserves the right to make modifications without prior notice.