ALBA ROUND CONCRETE ABOVE COUNTER BASIN - TUSCAN

Code	RB074TU
Colour	Tuscan
Material	Concrete
Install Type	Above Counter

Details

- Unique visual appeal with variations in colour, texture, and small surface details like pinholes or bubbles
- Tuscan finish
- Wide round bowl design
- Concrete with food-grade nano sealant
- No overflow
- Requires 32 mm non-overflow waste (not included)

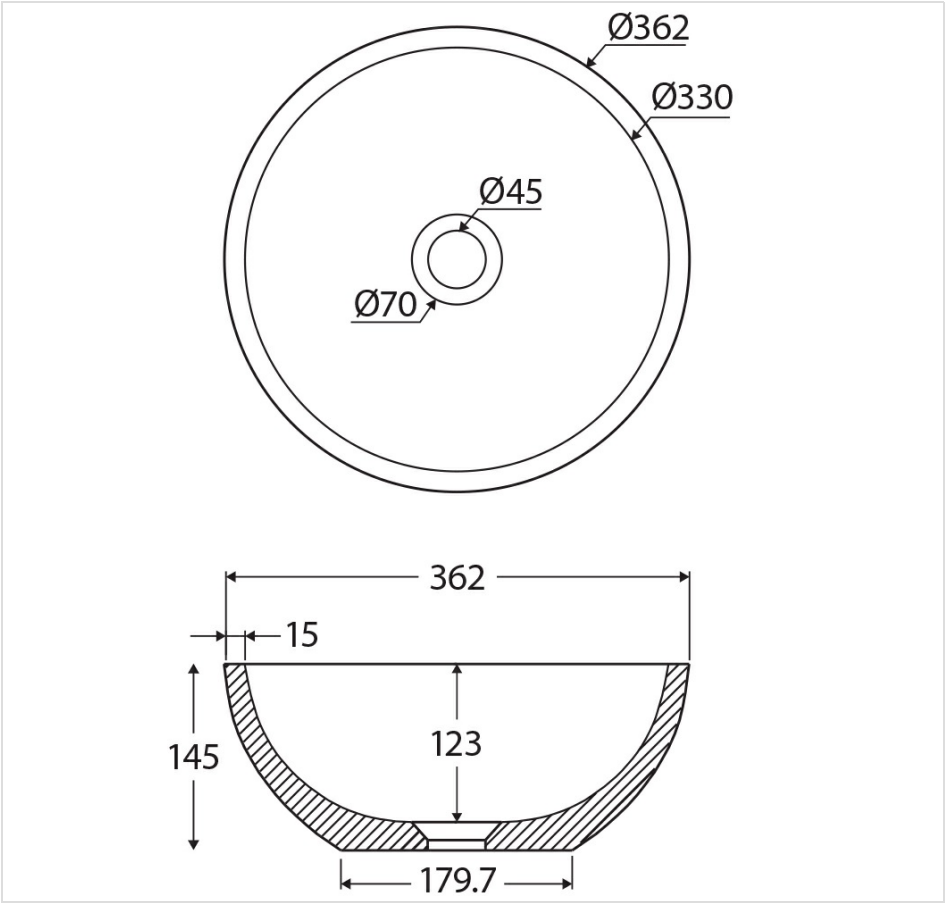



Specifications

Overall Size	362 mm (L) × 362 mm (W) × 145 mm (H)
Weight	7 kg
Warranty	Visit: **fienza.com.au/warranty** for more details
WELS Registration	N/A
WELS Flow Rating	N/A

Product/Installation Notes

Requires waste - available separately.

We aim to ensure that specifications are correct at the time of publication. All measurements are shown in millimetres. Always use measurements of actual product received for final specification as the technical drawing may contain differences. Please note this product may have a visible printed FIENZA or Watermark logo. Due to printing limitations, physical colour may vary from the image shown. FIENZA reserves the right to make modifications without prior notice.