fienza

BLANCA CONCRETE WALL BASIN - TUSCAN

Code	RB061TU
Colour	Tuscan
Material	Concrete
Install Type	Wall Hung

Details

- Unique visual appeal with variations in colour, texture, and small surface details like pinholes or bubbles
- Tuscan finish
- Right bowl design with integrated shelf
- Concrete with food-grade nano sealant
- No overflow
- Requires 32 mm non-overflow waste (not included)
- Extra heavy duty mounting brackets and bolts included

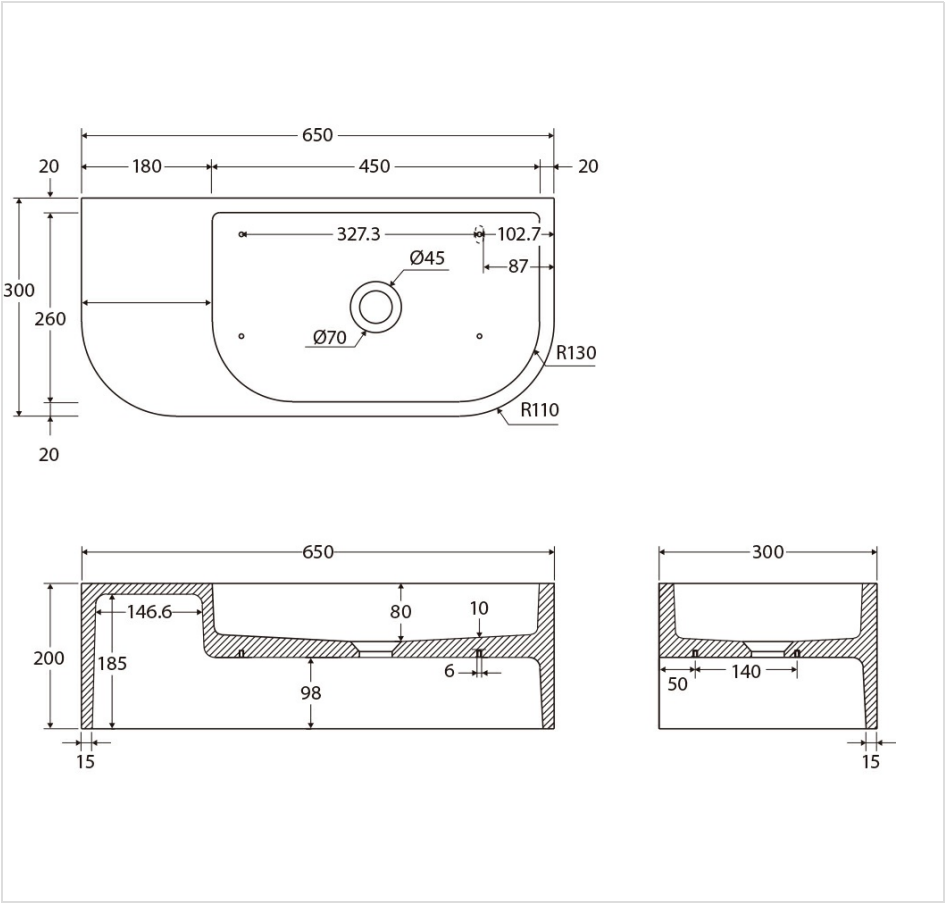



Product/Installation Notes

Requires waste - available separately.

Specifications

Overall Size	650 mm (L) × 300 mm (W) × 200 mm (H)
Weight	25 kg
Warranty	Visit: **fienza.com.au/warranty** for more details
WELS Registration	N/A
WELS Flow Rating	N/A

We aim to ensure that specifications are correct at the time of publication. All measurements are shown in millimetres. Always use measurements of actual product received for final specification as the technical drawing may contain differences. Please note this product may have a visible printed FIENZA or Watermark logo. Due to printing limitations, physical colour may vary from the image shown. FIENZA reserves the right to make modifications without prior notice.