fienza

JADA PILL CONCRETE ABOVE COUNTER BASIN - SAGE

Code	RB013SG
Colour	Sage
Material	Concrete
Install Type	Above Counter

Details

- Unique visual appeal with variations in colour, texture, and small surface details like pinholes or bubbles
- Sage finish
- Concrete with food-grade nano sealant
- No overflow
- Requires 32 mm non-overflow waste (not included)

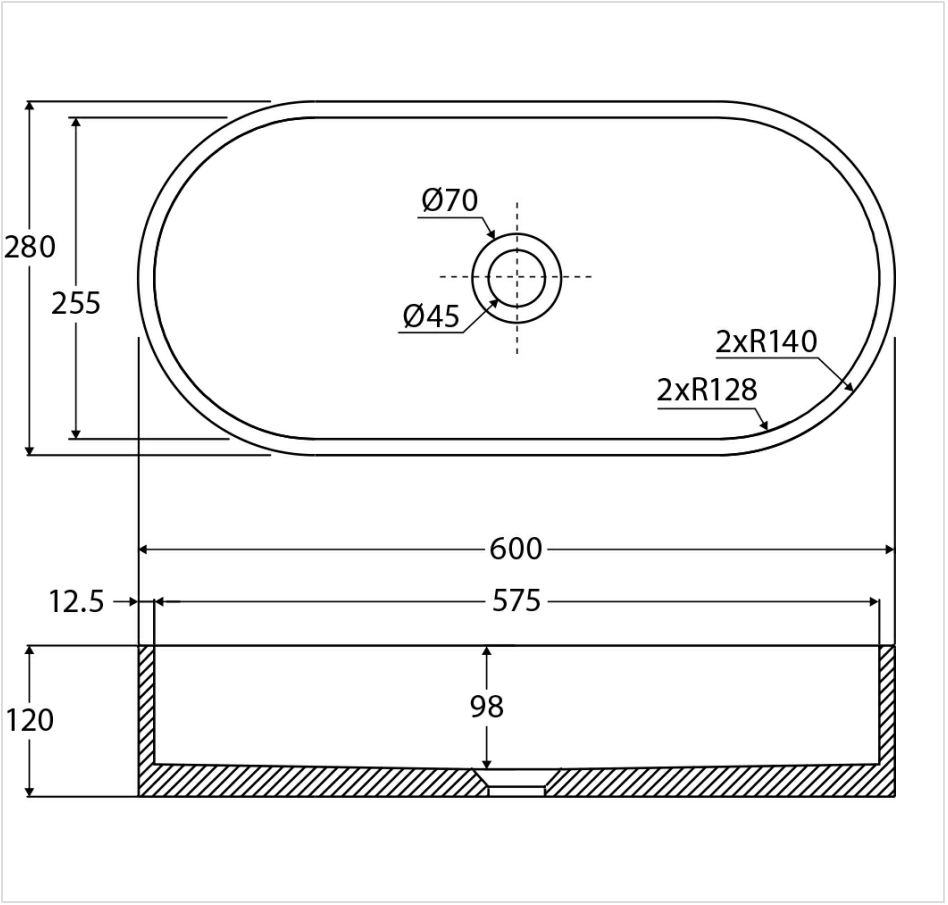



Product/Installation Notes

Requires waste - available separately.

Specifications

Overall Size	600 mm (L) × 280 mm (W) × 120 mm (H)
Weight	12.2 kg
Warranty	Visit: **fienza.com.au/warranty** for more details
WELS Registration	N/A
WELS Flow Rating	N/A

We aim to ensure that specifications are correct at the time of publication. All measurements are shown in millimetres. Always use measurements of actual product received for final specification as the technical drawing may contain differences. Please note this product may have a visible printed FIENZA or Watermark logo. Due to printing limitations, physical colour may vary from the image shown. FIENZA reserves the right to make modifications without prior notice.