fienza

PENCIL EDGE MIRROR CABINET - 900MM

Code	PSH900
Colour	Gloss White
Material	E1 MDF board
Install Type	Wall Hung

Details

- 5 mm thick glass with pencil edge
- Copper free mirror treated with resin emulsion paint to protect against corrosion
- Soft-close doors with fingerpull-notch
- Three internal board shelves
- Can be semi-inset into wall
- Made from E1 MDF board with a 2-Pac gloss white finish
- Strong 16mm thick backing board
- Easy to install: with high quality backing boards, fixings can be placed anywhere through the back of the cabinet

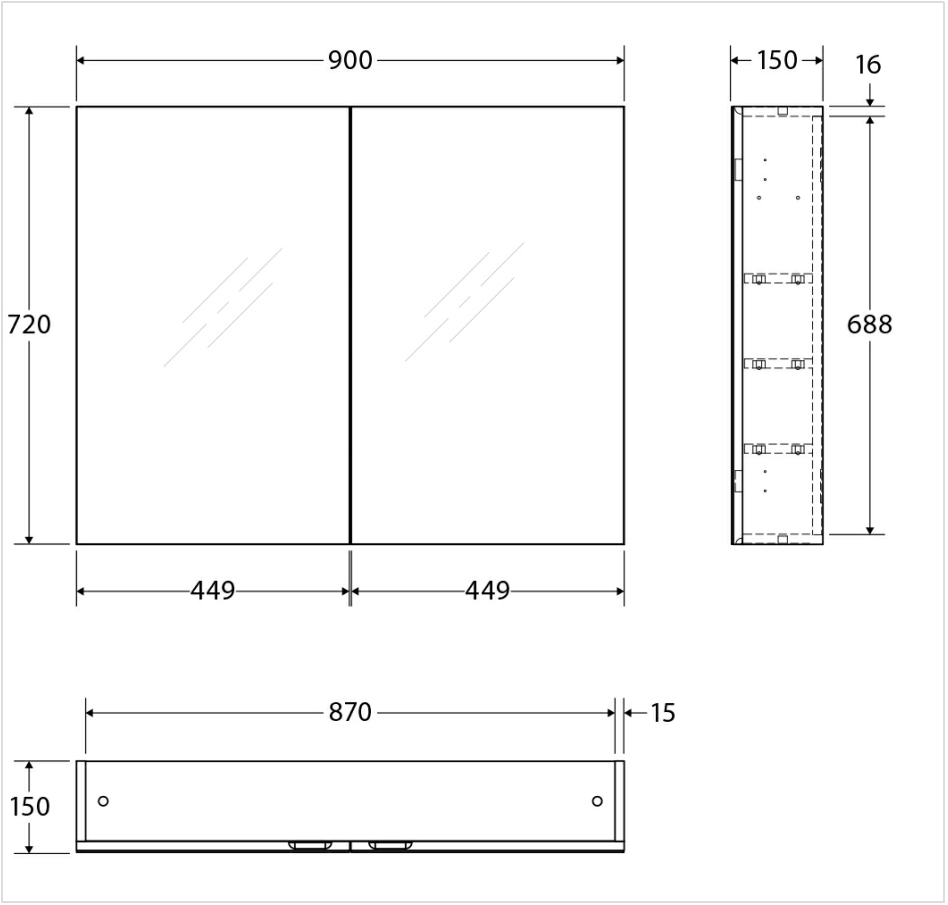



Product/Installation Notes

Strong 15mm backing boards for fixing to wall.

Specifications

Overall Size	900 mm (L) × 150 mm (W) × 720 mm (H)
Weight	35 kg
Warranty	Visit: **fienza.com.au/warranty** for more details
WELS Registration	N/A
WELS Flow Rating	N/A

We aim to ensure that specifications are correct at the time of publication. All measurements are shown in millimetres. Always use measurements of actual product received for final specification as the technical drawing may contain differences. Please note this product may have a visible printed FIENZA or Watermark logo. Due to printing limitations, physical colour may vary from the image shown. FIENZA reserves the right to make modifications without prior notice.