fienza

KAYA HANDHELD SHOWER HEAD - URBAN BRASS

Code	MSH115UB
Colour	Urban Brass
Material	ABS
Install Type	Shower

Details

- PVD urban brass finish
- Single water-flow setting
- Easy to clean TPR nozzles
- Made from ABS
- Male 1/2" BSP inlet connection

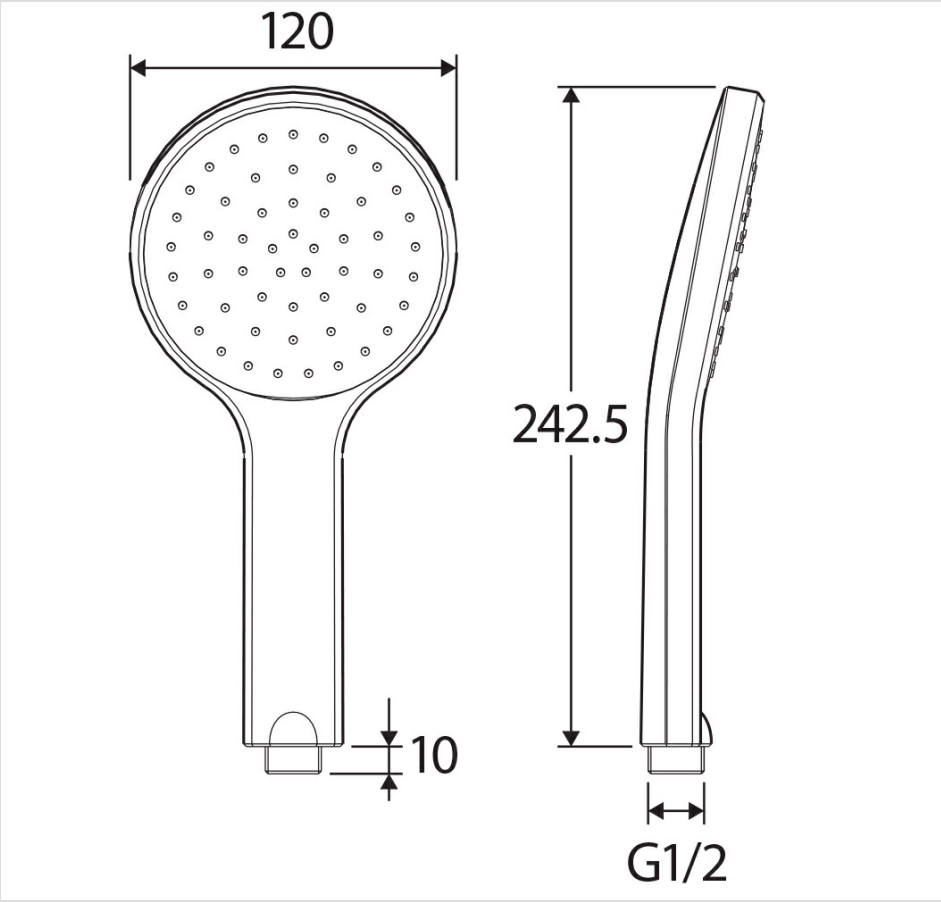



Product/Installation Notes

This product may have a visible Fienza or Watermark logo.

Specifications

Overall Size	120 mm (L) × 65 mm (W) × 242.5 mm (H)
Weight	0.3 kg
Warranty	Visit: **fienza.com.au/warranty** for more details
WELS Registration	S15838
WELS Flow Rating	3 Star, 9L/min

We aim to ensure that specifications are correct at the time of publication. All measurements are shown in millimetres. Always use measurements of actual product received for final specification as the technical drawing may contain differences. Please note this product may have a visible printed FIENZA or Watermark logo. Due to printing limitations, physical colour may vary from the image shown. FIENZA reserves the right to make modifications without prior notice.