fienza

REBA LED FRAMED MIRROR - 700MM - MATTE WHITE

Code	LED700FRW
Colour	Matte White
Material	Glass & Aluminium
Install Type	Mounting Brackets with Electrical

Details

- Adjustable colour temperature (6000, 4000 or 3000K)
- Built-in demister
- Illuminating touch sensor for light and demister
- 5mm thick glass mirror with frosted lighting
- Aluminium frame – select from powder-coated matte white, matte black, anodised urban brass and brushed copper finishes
- Copper-free mirror to prevent corrosion
- Includes wall mounting screws and anchor plugs
- Supplied in extra strong packaging for added protection
- 220-240V AC 50/60Hz
- IP44 rating

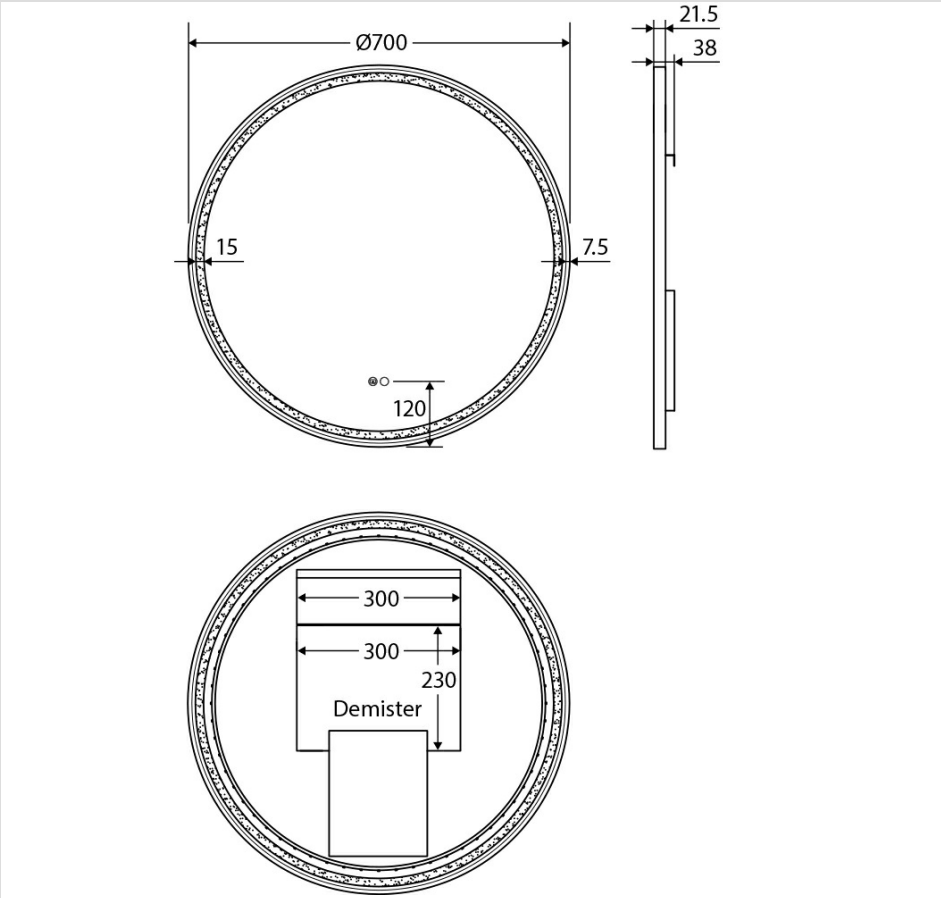

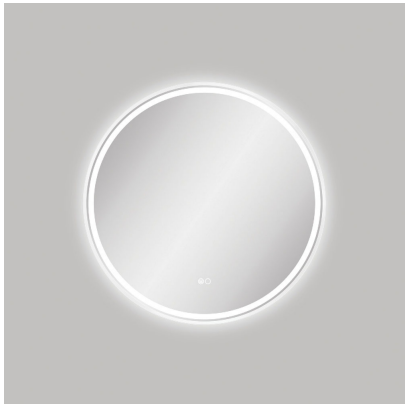

Specifications

Overall Size	700 mm (L) × 21.5 mm (W) × 700 mm (H)
Weight	9 kg
Warranty	Visit: **fienza.com.au/warranty** for more details
WELS Registration	N/A
WELS Flow Rating	N/A

Product/Installation Notes

Mirror must be installed by a licensed electrician in accordance with local regulations.

We aim to ensure that specifications are correct at the time of publication. All measurements are shown in millimetres. Always use measurements of actual product received for final specification as the technical drawing may contain differences. Please note this product may have a visible printed FIENZA or Watermark logo. Due to printing limitations, physical colour may vary from the image shown. FIENZA reserves the right to make modifications without prior notice.