fienza

HAMPTON LED MIRROR - 900 X 700 MM

Code	LED01-90
Colour	Mirror
Material	Glass
Install Type	Mounting Brackets with Electrical

Details

- Changeable colour temperature (6000, 4000 or 3000K)
- Built-in demister
- Illuminating touch sensors for light and demister
- 5mm thick glass mirror with inset illuminated accent
- Copper-free to prevent corrosion
- Includes wall mounting screws and anchor plugs
- Supplied in extra strong packaging for added protection
- 220-240V AC 50/60Hz
- IP44 rating
- SAA approved

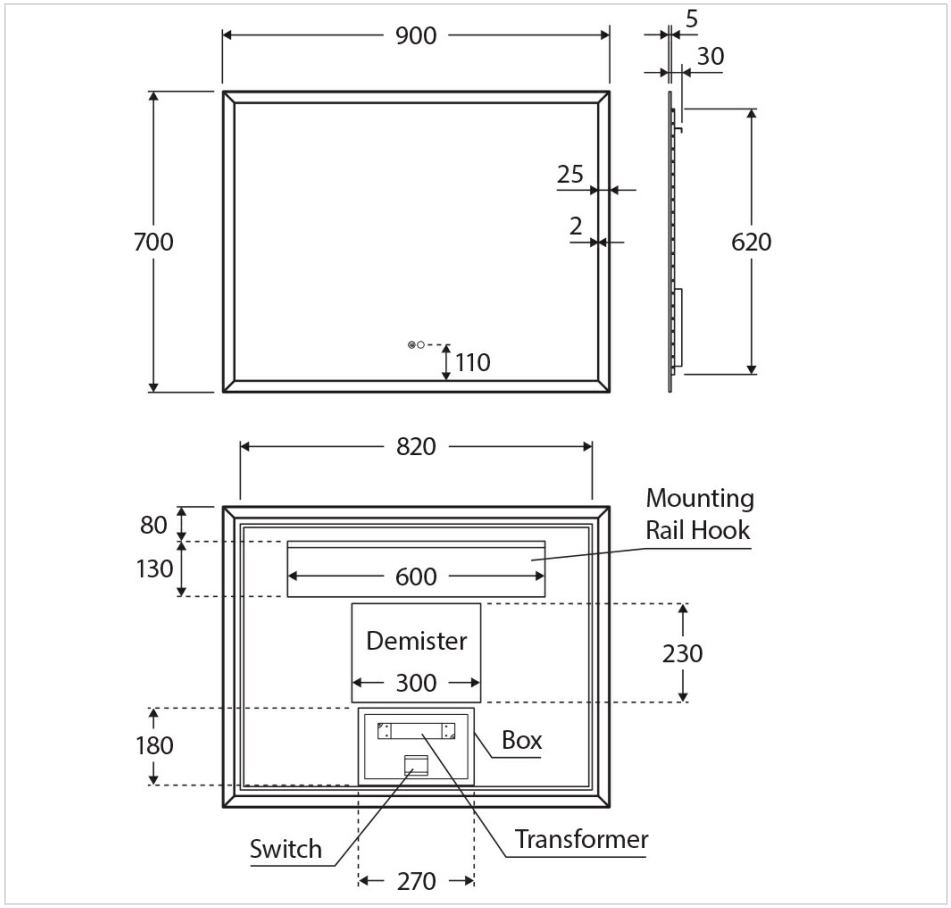

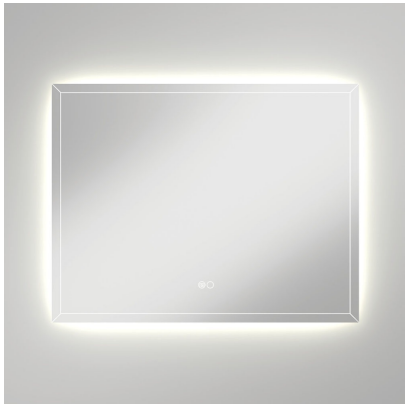

Product/Installation Notes

Mirror must be installed by a licensed electrician in accordance with local regulations.

Specifications

Overall Size	900 mm (L) × 30 mm (W) × 700 mm (H)
Weight	14.7 kg
Warranty	Visit: **fienza.com.au/warranty** for more details
WELS Registration	N/A
WELS Flow Rating	N/A

We aim to ensure that specifications are correct at the time of publication. All measurements are shown in millimetres. Always use measurements of actual product received for final specification as the technical drawing may contain differences. Please note this product may have a visible printed FIENZA or Watermark logo. Due to printing limitations, physical colour may vary from the image shown. FIENZA reserves the right to make modifications without prior notice.