fienza

CARE TOILET SUPPORT ARMS

Code	FAL108
Colour	Gloss White
Material	304 Stainless Steel & PU Leather
Install Type	Toilet Mounted

Details

- Suited for independent living
- Provides firm support and extra assistance for sitting and standing
- Arms can pivot backwards when not in use
- Rubber coated arm for a strong grip
- Fitted between seat and pan
- Can be installed onto floor standing and wall faced toilet suites (fixings included)
- Maximum load rating: 120kg

Please note: These products may have a visible Fienza logo marking.

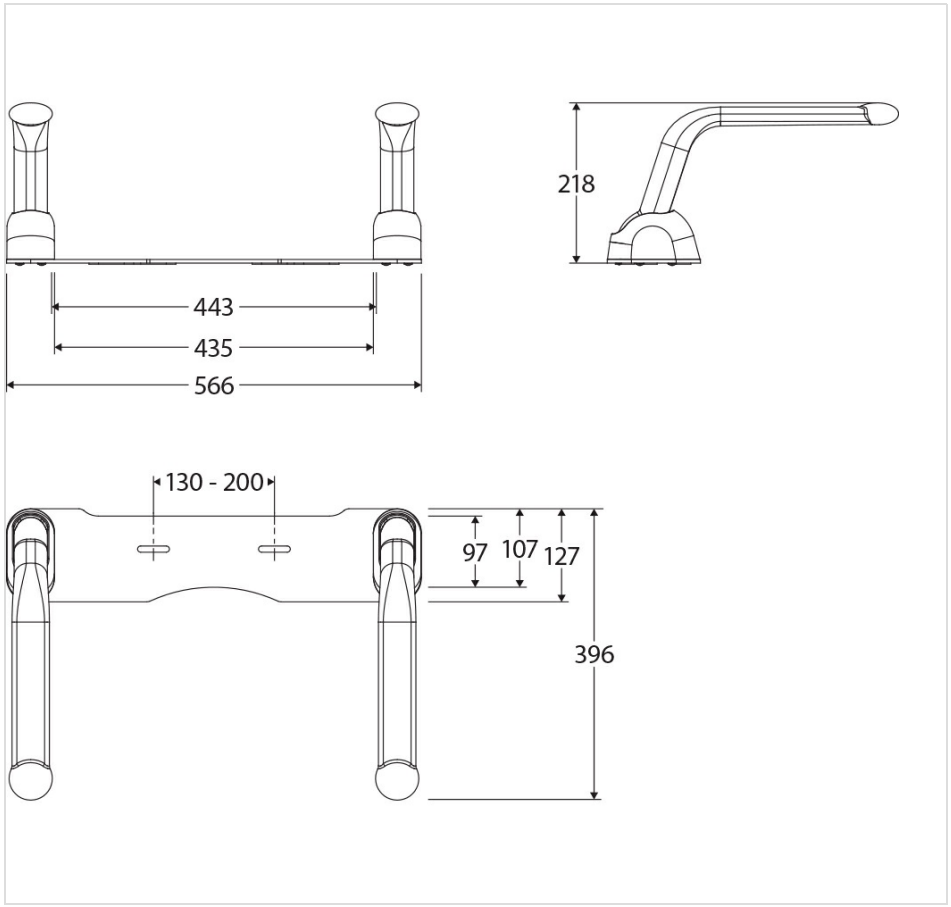



Product/Installation Notes

N/A

Specifications

Overall Size	566 mm (L) × 396 mm (W) × 218 mm (H)
Weight	6.65 kg
Warranty	Visit: **fienza.com.au/warranty** for more details
WELS Registration	N/A
WELS Flow Rating	N/A

We aim to ensure that specifications are correct at the time of publication. All measurements are shown in millimetres. Always use measurements of actual product received for final specification as the technical drawing may contain differences. Please note this product may have a visible printed FIENZA or Watermark logo. Due to printing limitations, physical colour may vary from the image shown. FIENZA reserves the right to make modifications without prior notice.