fienza

MINKA SOLID SURFACE FREESTANDING BASIN - MATTE WHITE

Code	CSB801
Colour	Matte White
Material	Solid Surface
Install Type	Freestanding

Details

- Matte white finish
- Fluted design
- Solid surface
- No tap hole or overflow
- Requires 32 mm non-overflow waste (not included)

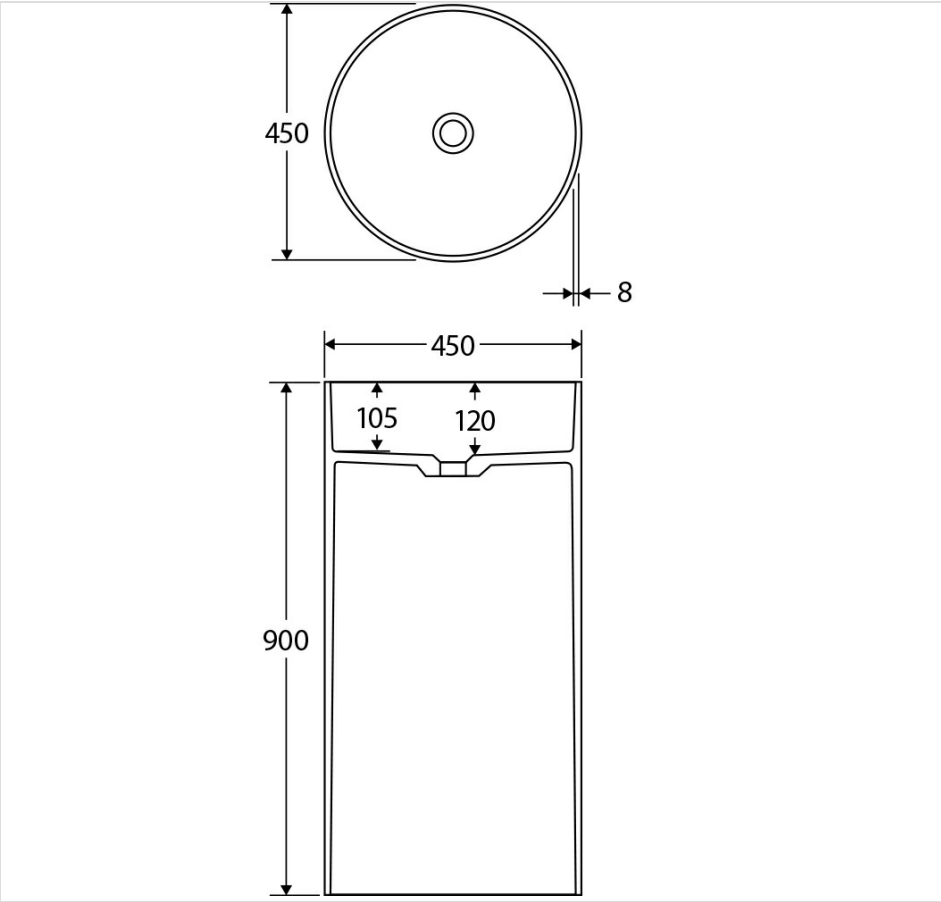

Product/Installation Notes

Requires waste - available separately.

Specifications

Overall Size	450 mm (L) × 450 mm (W) × 900 mm (H)
Weight	32 kg
Warranty	Visit: **fienza.com.au/warranty** for more details
WELS Registration	N/A
WELS Flow Rating	N/A

We aim to ensure that specifications are correct at the time of publication. All measurements are shown in millimetres. Always use measurements of actual product received for final specification as the technical drawing may contain differences. Please note this product may have a visible printed FIENZA or Watermark logo. Due to printing limitations, physical colour may vary from the image shown. FIENZA reserves the right to make modifications without prior notice.