fienza

LEXY SOLID SURFACE ABOVE COUNTER BASIN

Code	CSB038
Colour	Matte White
Material	Solid Surface
Install Type	Above Counter

Details

- Matte white finish
- Solid surface
- No tap hole or overflow
- Requires 32mm waste without overflow (not included)
- Matching pop-up waste available separately

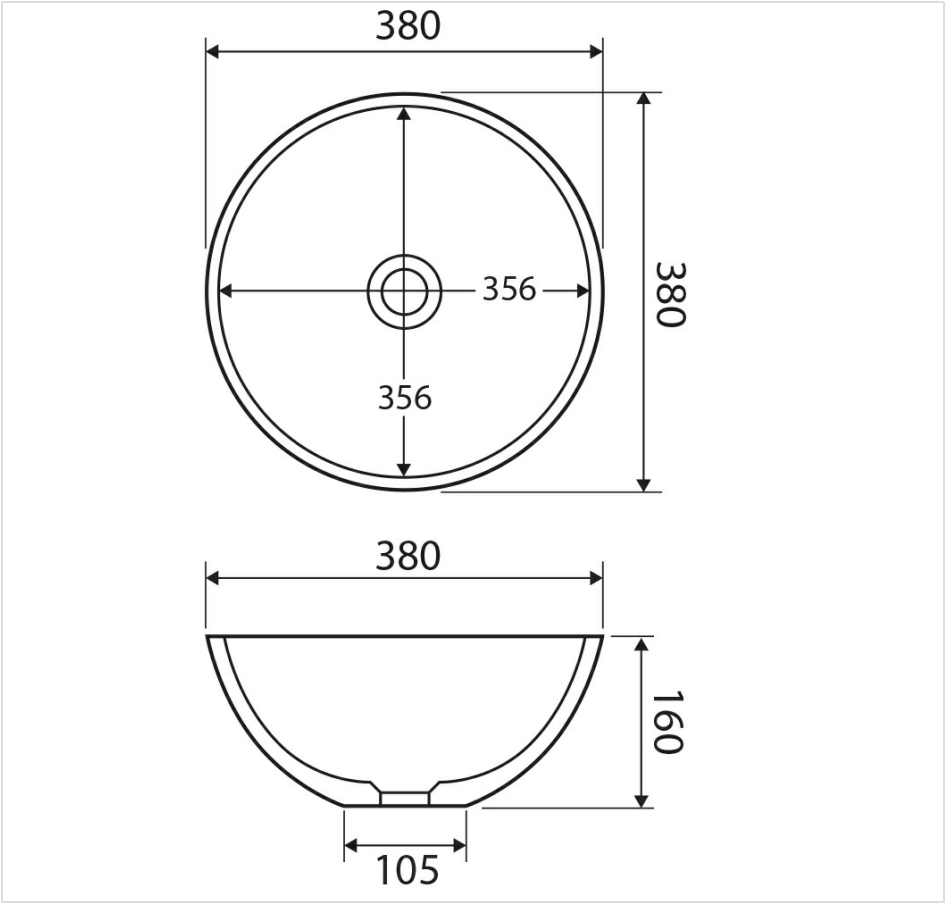



Product/Installation Notes

Requires waste - available separately.

Specifications

Overall Size	380 mm (L) × 380 mm (W) × 160 mm (H)
Weight	5 kg
Warranty	Visit: **fienza.com.au/warranty** for more details
WELS Registration	N/A
WELS Flow Rating	N/A

We aim to ensure that specifications are correct at the time of publication. All measurements are shown in millimetres. Always use measurements of actual product received for final specification as the technical drawing may contain differences. Please note this product may have a visible printed FIENZA or Watermark logo. Due to printing limitations, physical colour may vary from the image shown. FIENZA reserves the right to make modifications without prior notice.